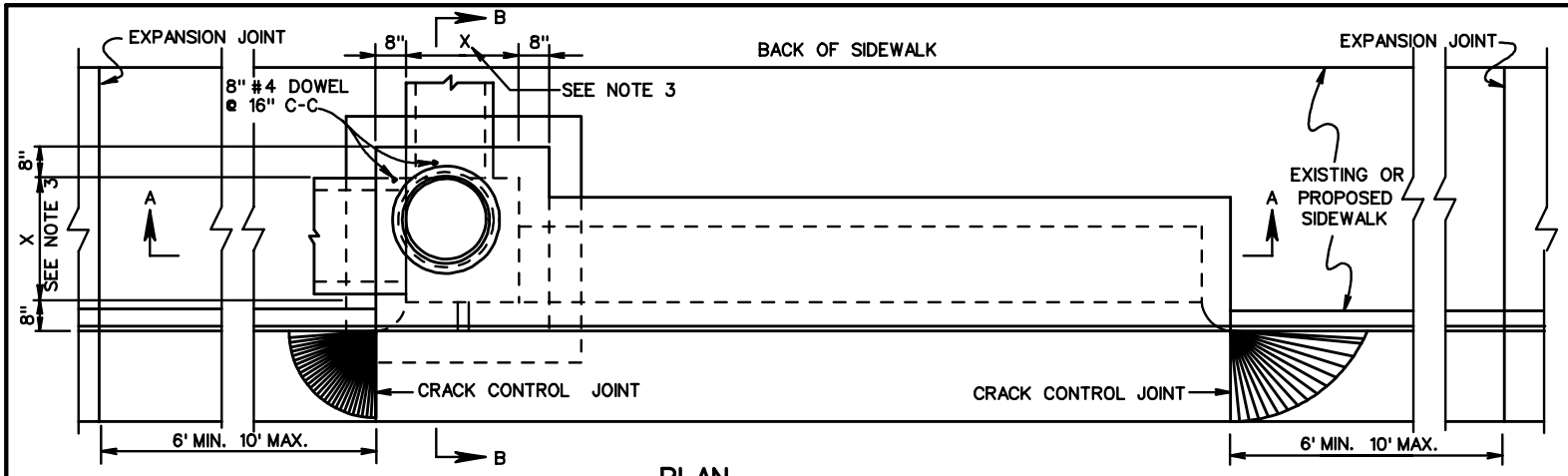

PLAN

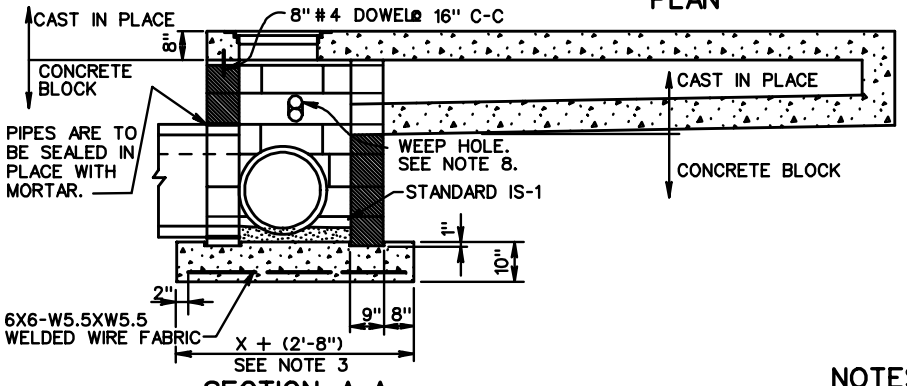

SECTION A-A

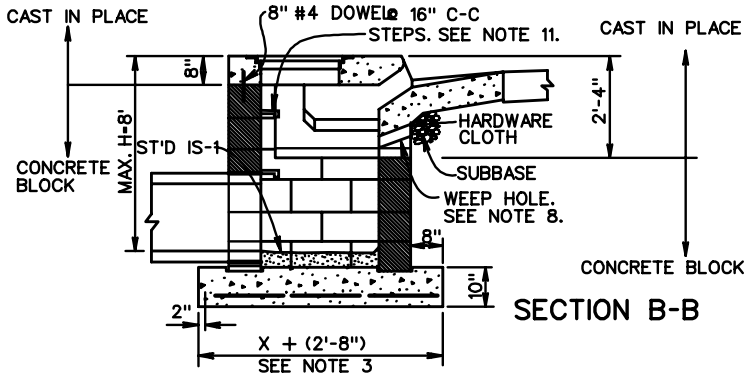

SECTION B-B

NOTES

1. CONCRETE BLOCK IS TO BE EITHER 8" X 8" X 16" OR 8"X 8" X 12" (NOMINAL DIMENSION) SOLID CONCRETE MASONRY BLOCK MEETING THE REQUIREMENTS OF ASTM C-139.
2. DETAILS ABOVE APPLY TO STANDARD DRAWINGS 3A THROUGH 3F AND 4A THROUGH 4F.
3. X EQUALS INTERIOR DIMENSION OF STANDARD DROP INLET SPECIFIED ON PLANS.
4. PARTIAL BLOCK, BRICK OR MORTAR MAY BE USED TO ADJUST TOP TO CURB ELEVATION.
5. REINFORCED CONCRETE FOOTING MAY BE PRECAST OR CAST IN PLACE. LIFTING HOOKS OF FABRICATORS DESIGN ARE TO BE PROVIDED IN PRECAST FOOTING.
6. MAXIMUM DEPTH ALLOWABLE FOR CONCRETE BLOCK CONSTRUCTION IS TO BE 8 FEET.
7. MORTAR JOINTS ON INTERIOR SURFACES ARE TO BE FINISHED FLUSH AND MAY BE LEFT EXTRUDED ON EXTERIOR FACES.
8. THE "H" DIMENSION SHOWN ON THE ST'DS AND SPECIFIED ON THE PLANS WILL MEASURED FROM THE INVERT OF THE OUTFALL PIPE TO THE TOP OF THE STRUCTURE. PLAN "H" DIMENSIONS ARE APPROXIMATE ONLY FOR ESTIMATING PURPOSES AND THE ACTUAL DIMENSIONS SHALL BE DETERMINED BY THE CONTRACTOR BY FIELD CONDITIONS.
9. WHEN SPECIFIED ON THE PLANS THE INVERT IS TO BE SHAPED IN ACCORDANCE WITH STANDARD PLAN IS-1. THE COST OF FURNISHING AND PLACING ALL MATERIALS INCIDENTAL TO THE SHAPING IS TO BE INCLUDED IN THE BID PRICE FOR THE STRUCTURE.
10. 3" DIAMETER WEEP HOLE SHALL BE LOCATED TO DRAIN SUBBASE MATERIAL. WEEP HOLE WITH 12" X 12" PLASTIC HARDWARE CLOTH ¼" MESH OR GALVANIZED STEEL WIRE, MINIMUM WIRE DIAMETER 0.03", NUMBER 4 MESH HARDWARE CLOTH ANCHORED FIRMLY TO THE OUTSIDE OF THE STRUCTURE.
11. ALL DETAILS AND DIMENSIONS OF THE PORTION OF THE INLET DESIGNATED "CAST-IN-PLACE", ARE TO BE IN STRICT ACCORDANCE WITH THE ST'D. DRAWING SPECIFIED ON THE PLANS. THIS WILL INCLUDE ALL NOTES, DETAILS OF FRAME AND COVER, GUTTER, AND ANGLE IRON. ALL REINF. STEEL WILL REMAIN AS DETAILED WITH THE FOLLOWING EXCEPTIONS:
    A) THE VERTICAL LEG OF BARS C WILL BE ELIMINATED.
    B) BARS G WILL BE ELIMINATED AND REPLACED WITH DOWELS SHOWN HEREON.
12. IN THE EVENT THE INVERT OF THE OUTFALL PIPE IS HIGHER THAN THE BOTTOM OF THE STRUCTURE, THE INVERT OF THE STRUCTURE SHALL BE SHAPED WITH CEMENT MORTAR TO PREVENT STANDING OR PONDING OF WATER IN THE STRUCTURE. THE COST OF FURNISHING AND PLACING ALL MATERIALS INCIDENTALS TO THE SHAPING IS TO BE INCLUDED IN THE BID PRICE FOR THE STRUCTURE.
13. STEPS ARE TO BE PROVIDED WHEN H IS 4'-0" OR GREATER. FOR DETAILS SEE STANDARD ST-1.

SPECIFICATION REFERENCE	CONSTRUCTION METHODS FOR CONCRETE MASONRY BLOCK CURB DROP INLET	
302	VIRGINIA DEPARTMENT OF TRANSPORTATION	104.42