SMH-1

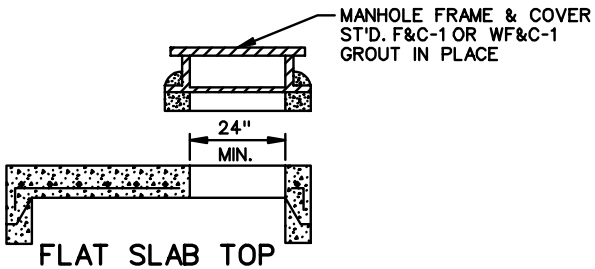

FLAT SLAB TOP
STANDARD T-MH-2

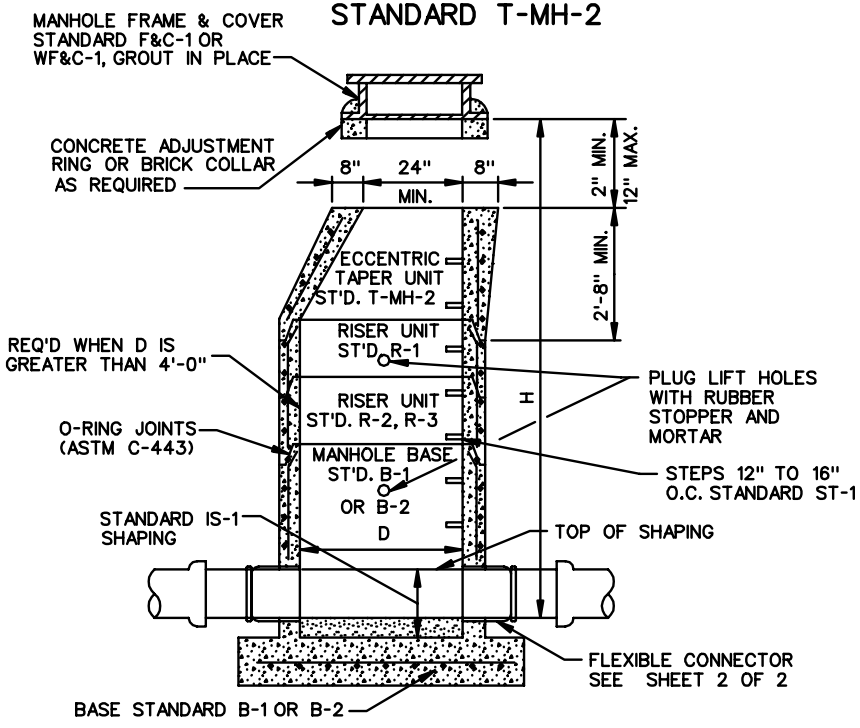

PRECAST CONCRETE MANHOLE

NOTES:

1. WHEN HEIGHT H EXCEEDS 12' A MINIMUM NOMINAL DIAMETER D OF THE BASE UNIT SHALL BE 5' WITH A SECTION HEIGHT OF 6' AND A STANDARD RISER UNIT R-2 OR R-3 SHALL BE REQUIRED.
2. FLAT SLAB TOP STANDARD T-MH-2 SHALL ONLY BE ALLOWED ON SHALLOW MANHOLES.
3. STEPS SHALL BE ENCASED IN CORROSION RESISTANT RUBBER OR OTHER MATERIAL APPROVED BY THE ENGINEER.
4. STEPS SHALL BE OMITTED WHEN SPECIFIED IN THE PLANS.
5. SEE STANDARD SHEET NUMBER 106.07, VOLUME I, FOR ADDITIONAL MANHOLE DETAILS.

NOTES:

FOR DIMENSIONS NOT SHOWN SEE VDOT ST'D. B-1, B-2 & R-1

CONCRETE ENCASEMENT TO EXTEND TO LIMITS OF EXCAVATION

DIA. OF DROP PIPE	
D-1	D-2
8"	8"
10"	8"
12"	10"
15"	12"
18"	15"
24" & ABOVE	18"

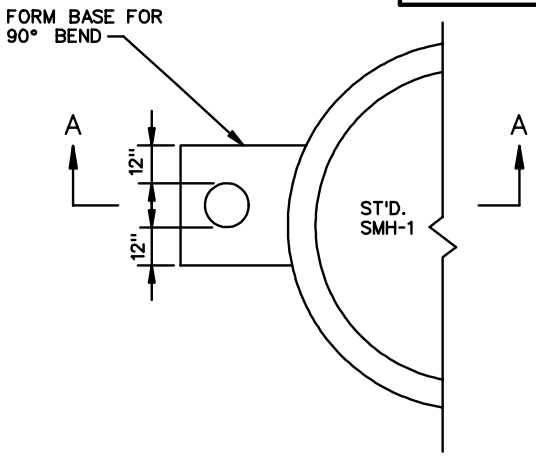

SECTION B-B

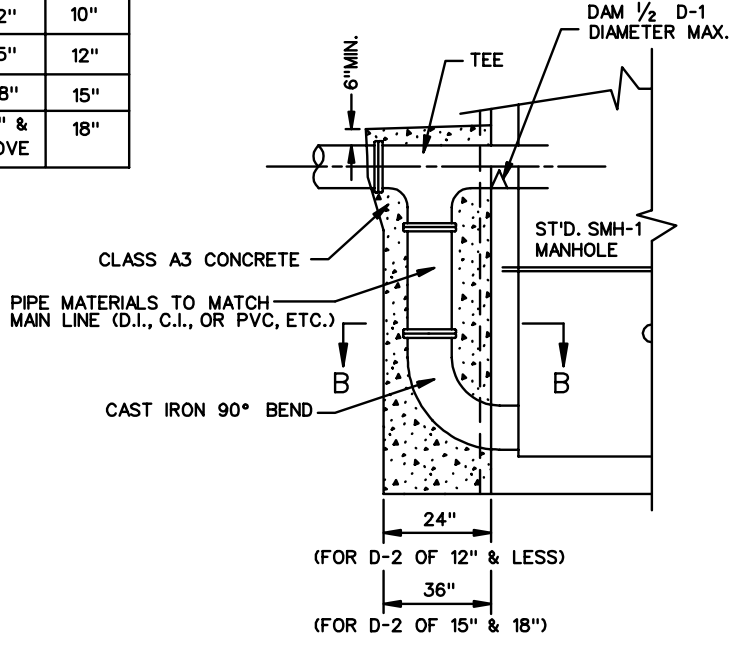

SECTION A-A

SANITARY DROP CONNECTION

SPECIFICATION REFERENCE	SANITARY SEWER MANHOLE VIRGINIA DEPARTMENT OF TRANSPORTATION	VDOT ROAD AND BRIDGE STANDARDS
		REVISION DATE / SHEET 1 OF 2
		1411.01