BCW-21

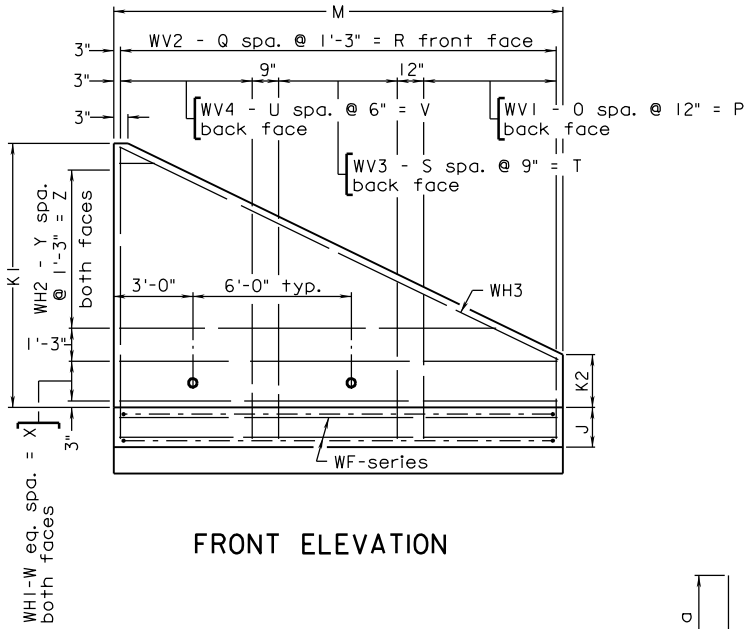

FRONT ELEVATION

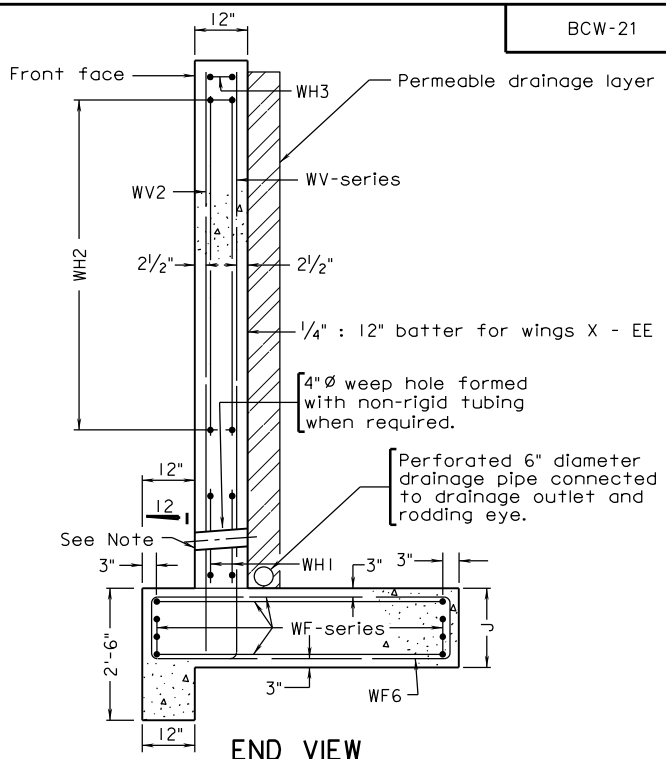

END VIEW

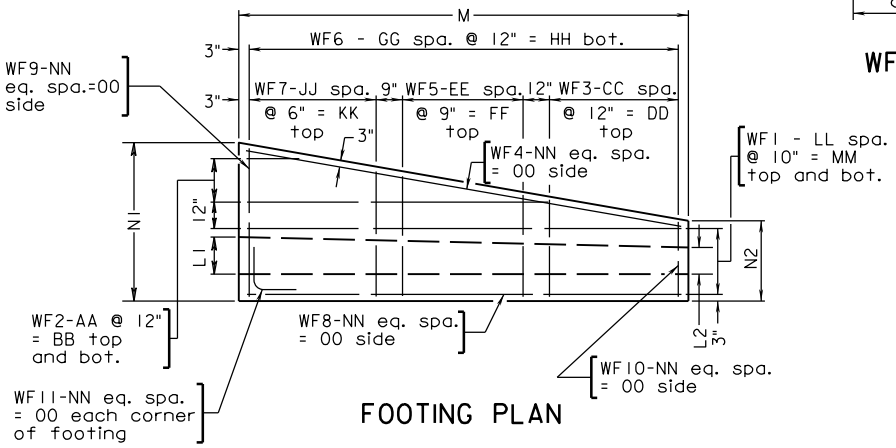

FOOTING PLAN

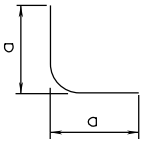

WF11

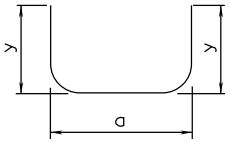

WF1 TO WF3, WF5 TO WF7

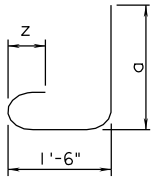

WV1, WV3, WV4

TABLE A	
Wall	y
A-W	9½"
X	1'-0½"
Y-CC	1'-3½"
DD-EE	1'-9½"

TABLE B		
Bar Size	Pin Dia.	Z
#3	2¼"	4"
#4	3"	4½"
#5	3¾"	5"
#6	4½"	6"
#7	5¼"	7"
#8	6"	8"
#9	9"	10⅛"

TABLE C	
Bar Size	Splice Length
#4	1'- 9"
#5	2'- 4"
#6	2'- 7"
#7	3'- 3"
#8	4'- 2"
#9	5'- 4"

A COPY OF THE ORIGINAL SEALED AND SIGNED DRAWING AND DESIGN STATEMENT IS ON FILE IN THE CENTRAL OFFICE.

SPECIFICATION REFERENCE

WING DETAIL

2:1 FILL SLOPE - TYPE I

VIRGINIA DEPARTMENT OF TRANSPORTATION

VDOT
ROAD AND BRIDGE STANDARDS

REVISION DATE 07/16

SHEET 2 OF 8

1007.02