JB-1

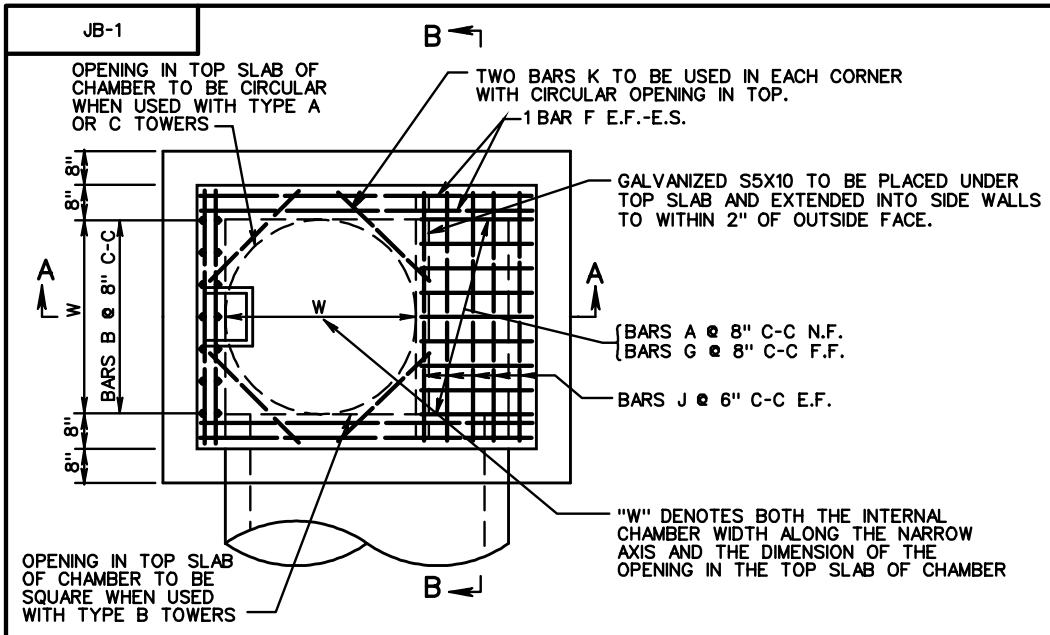

PLAN VIEW
(TOP SLAB REINFORCEMENT)

NOTES:

1. ALL REINFORCING STEEL TO BE #6 BARS WITH A MINIMUM 1½" CONCRETE COVER.
2. ANY REINFORCING BARS IN CONFLICT WITH PIPE SHELLS ARE TO BE CUT A MINIMUM OF 1½" FROM PIPE.
3. FOR DETAILS METHOD OF TURNING ANGLES AND APPROXIMATE QUANTITIES SEE SHEET 2 OF 4.
4. PRECAST CHAMBERS OF THE BOLT TOGETHER TYPE MAY BE SUBSTITUTED WHEN APPROVED ON AN INDIVIDUAL BASIS.
5. ALL CONCRETE TO BE CLASS A3 IF CAST IN PLACE, 4000 PSI IF PRECAST.
6. THIS ITEM MAY BE PRECAST OR CAST IN PLACE.
7. ELIMINATE DOWELS WHEN PRECAST TYPE A TOWER ARE ELECTED.
8. WHEN SPECIFIED ON PLANS INVERT IS TO BE SHAPED IN ACCORDANCE WITH STANDARD IS-1. THE MATERIALS INCIDENTAL TO THE SHAPING ARE NOT TO BE MEASURED OR PAID SEPARATELY BUT THE COST OF SAME IS TO BE INCLUDED IN THE PRICE BID PER CUBIC YARD OF JUNCTION BOX CONCRETE

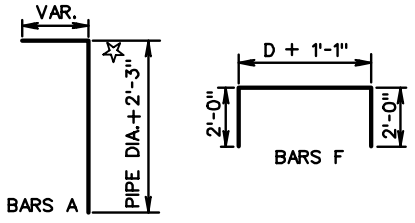

☆INCREASE INDICATED DIMENSION BY 1' FOR USE WITH 72" PIPE.

THE LENGTH OF ALL BARS AND THE NUMBER REQUIRED WILL VARY WITH THE SIZE OF CHAMBER . FOR APPROXIMATE WEIGHT SEE SHEET 2 AND 4 OF THIS STANDARD.

BARS B, C, E, G, H, AND J ARE STRAIGHT.

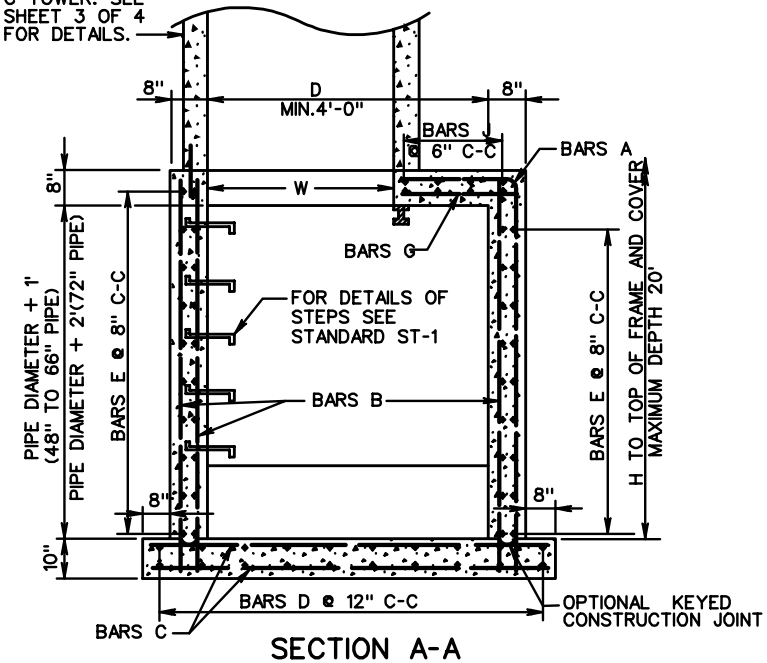

SECTION A-A

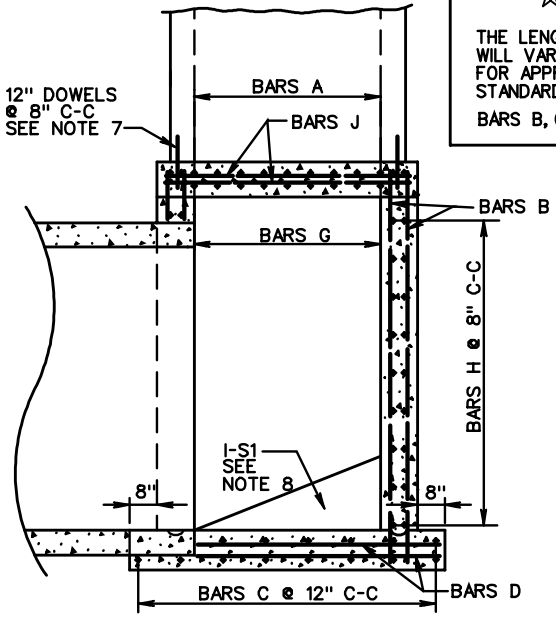

SECTION B-B

VDOT ROAD AND BRIDGE STANDARDS	JUNCTION BOX CHAMBER DETAILS FOR 48" - 72" PIPE CULVERTS MAX. DEPTH (H) = 20'	SPECIFICATION REFERENCE
SHEET 1 OF 4	VIRGINIA DEPARTMENT OF TRANSPORTATION	105 233 302
106.10	REVISION DATE	