REVISED ON 7/03 REVISED ON 7/04

GR-7

NOTES:

1. GUARDRAIL TERMINAL, STD. GR-7 IS TO BE SRT 350 (AS SHOWN) MANUFACTURED BY SYRO STEEL COMPANY. THE FLEAT 350 MANUFACTURED BY ROAD SYSTEMS, INC., OR OTHER VDOT APPROVED EQUAL MEETING NCHRP 350 TESTING CRITERIA UTILIZING A 4 FT. OFFSET.

2. THE POST OFFSET DIMENSION ARE GIVEN TO THE CENTER OF THE TRAFFIC FACE OF THE BLOCKOUTS EXCEPT AT THE FIRST TWO POST, WHERE THE DIMENSION IS TO THE CENTER OF THE TRAFFIC FACE OF THE POST. OFFSET POINTS ARE TO BE LOCATED BY CHORD MEASUREMENT AT THE BACK OF THE RAIL EQUAL TO THE NOMINAL POST SPACINGS SHOWN. POST ARE TO BE SET APPROXIMATELY RADIAL TO THE RAILING AT EACH POST LOCATION.

3. YELLOW 8" X 36" REFLECTIVE SHEETING, IN ACCORDANCE WITH VDOT SPECIFICATIONS, SHOULD BE APPLIED IN TERMINALS EMPLOYING W-BEAM END SECTIONS. FOR TERMINALS EMPLOYING IMPACT (EXTRUDER) HEADS, AMBER (YELLOW) REFLECTIVE SHEETING WITH BLACK DIAGONAL STRIPES SHOULD BE APPLIED TO THE FULL AREA INSIDE THE IMPACT HEAD WITH THE DIRECTION OF THE BLACK DIAGONAL STRIPES CONFORMING TO CURRENT MUTCD APPLICATION FOR TYPE 3 OBJECT MARKERS (OM-3).

4. FOR DETAILS OF GUARDRAIL TERMINAL INSTALLATION SITE PREPARATION REQUIREMENTS SEE STANDARD GR-SP.

5. DRIVE NAIL WITHIN 2" OF THE TOP OR BOTTOM OF BLOCKOUT AFTER 5/8" X 18" LG. BOLT IS INSTALLED.

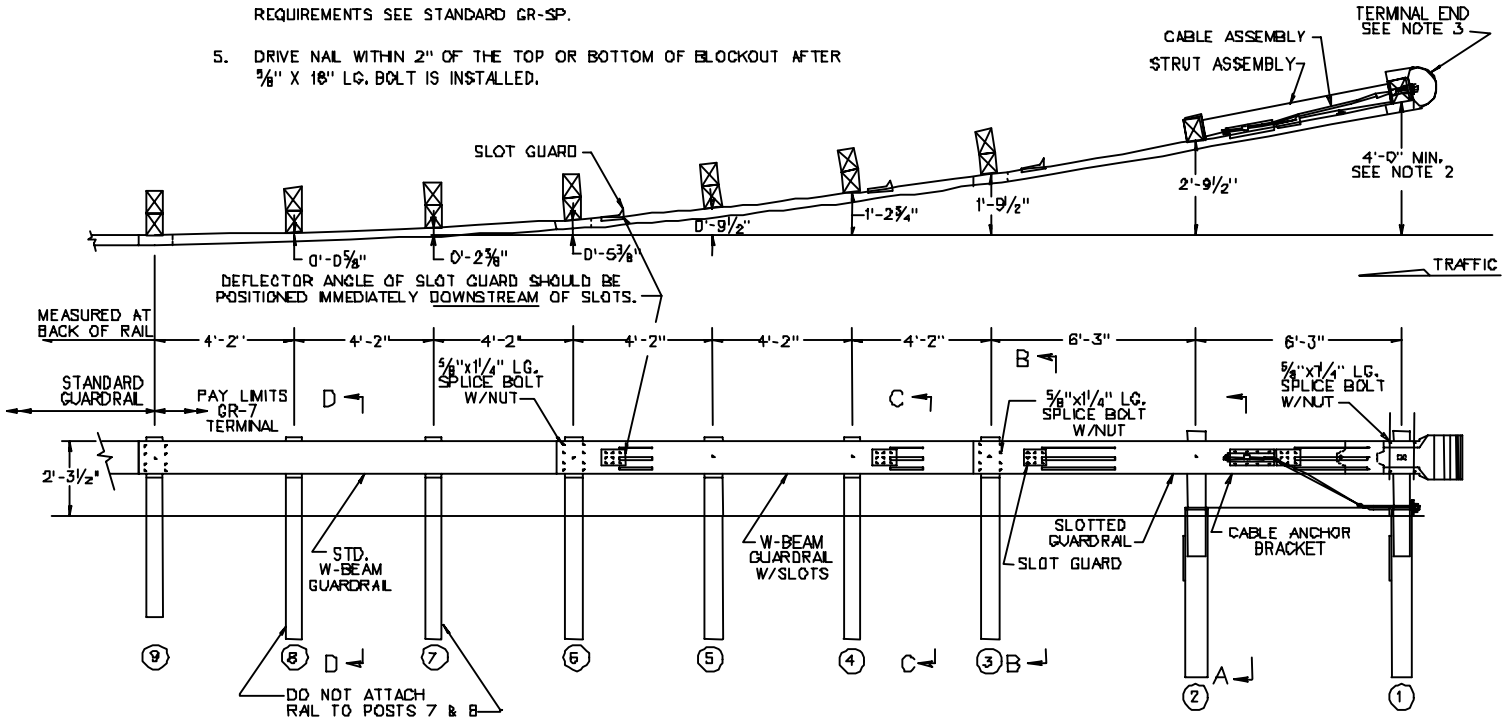

SHEET 1 OF 3

BREAKAWAY CABLE TERMINAL
4' FLARE

VIRGINIA DEPARTMENT OF TRANSPORTATION

REV.7/02

501.11

SPECIFICATION REFERENCE

221
505

REVISED ON 7/04

GR-7

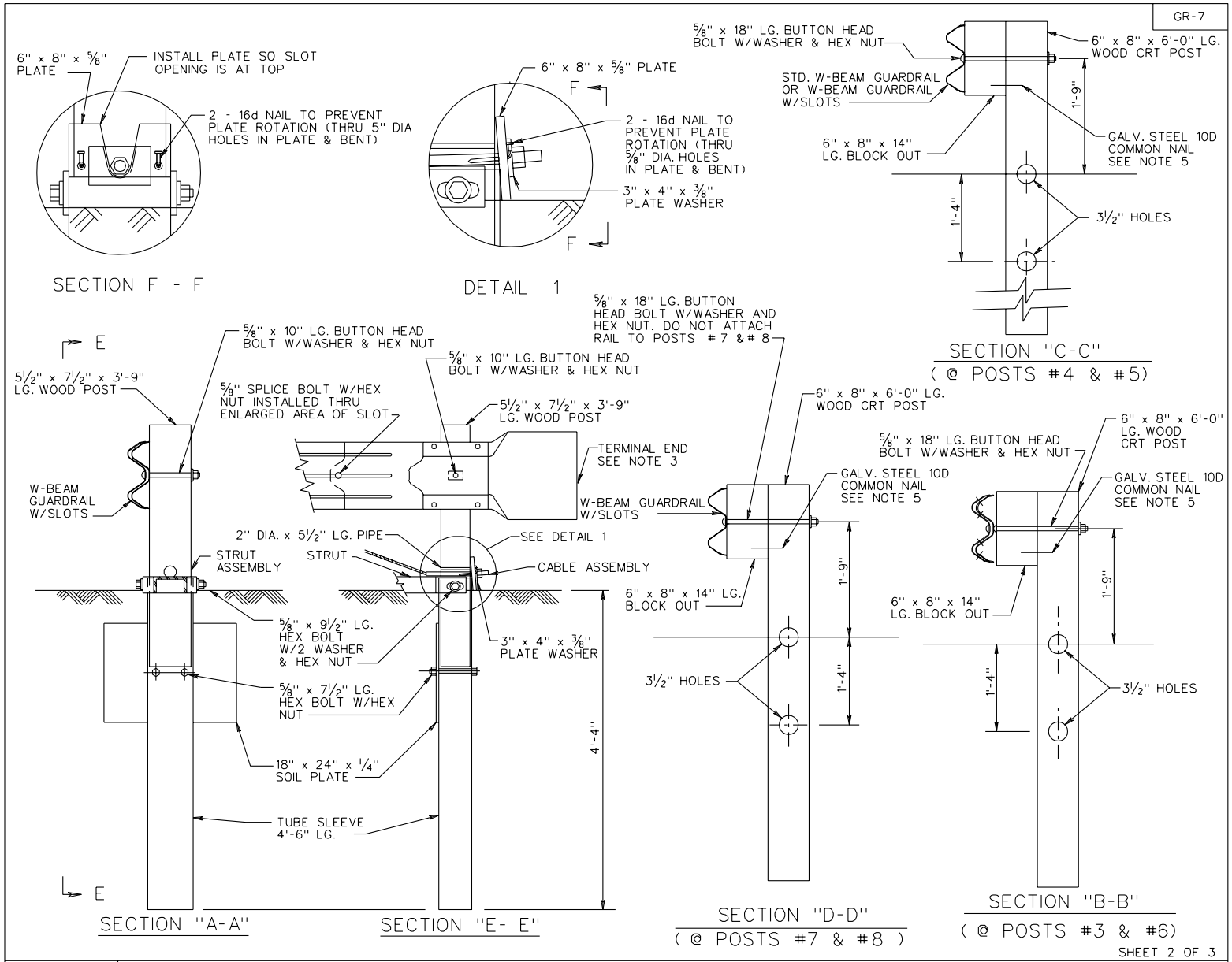

SHEET 2 OF 3

SPECIFICATION REFERENCE
221 505

BREAKAWAY CABLE TERMINAL
4' FLARE

VIRGINIA DEPARTMENT OF TRANSPORTATION

REV. 7/02

501.12