REVISED ON 3/03

GR-6

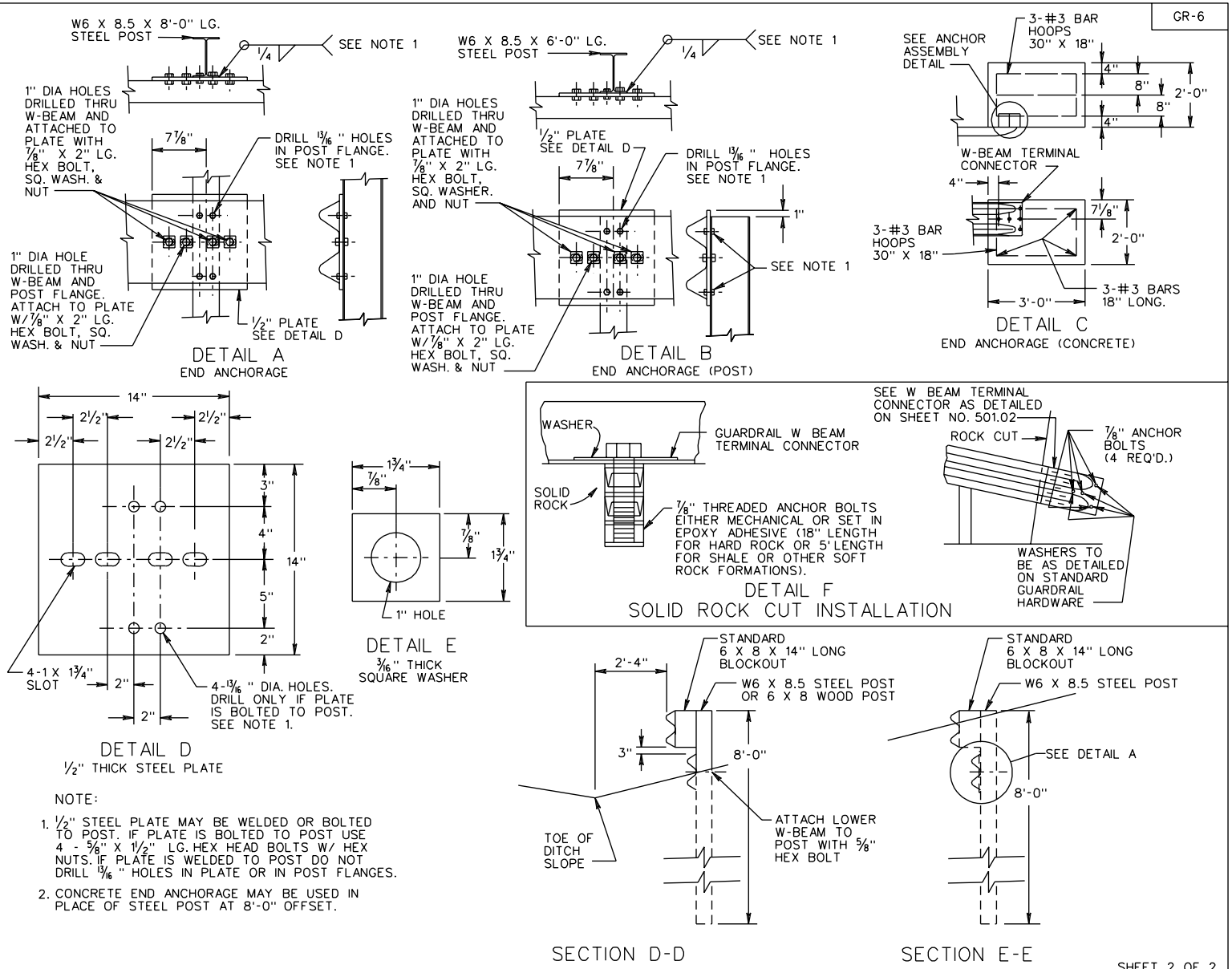

NOTE:

1. 1/2" STEEL PLATE MAY BE WELDED OR BOLTED TO POST. IF PLATE IS BOLTED TO POST USE 4 - 5/8" X 1 1/2" LG. HEX HEAD BOLTS W/ HEX NUTS. IF PLATE IS WELDED TO POST DO NOT DRILL 13/16" HOLES IN PLATE OR IN POST FLANGES.
2. CONCRETE END ANCHORAGE MAY BE USED IN PLACE OF STEEL POST AT 8'-0" OFFSET.

SHEET 2 OF 2

SPECIFICATION REFERENCE	TERMINAL TREATMENT FOR W BEAM GUARDRAIL	
505 221	VIRGINIA DEPARTMENT OF TRANSPORTATION	REV. 7/01 501.10