REVISED ON 2/06

DI-12,12A

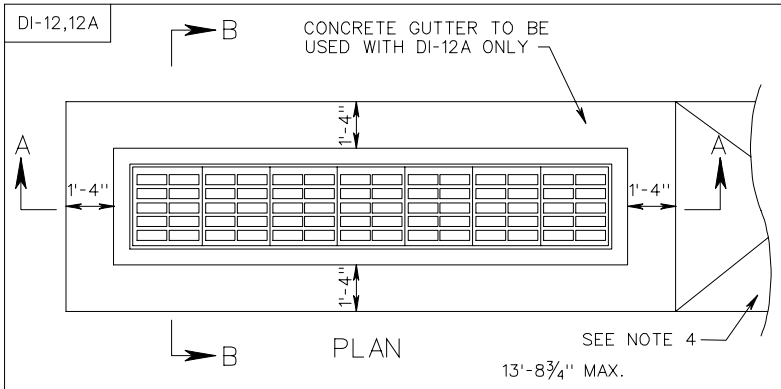

PLAN

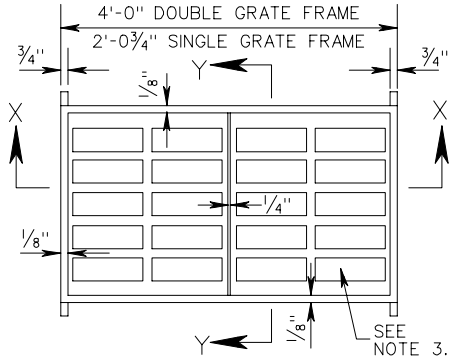

FRAME AND GRATE PLAN

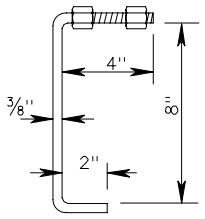

FRAME ANCHOR
⅜" DIAMETER BENT BAR

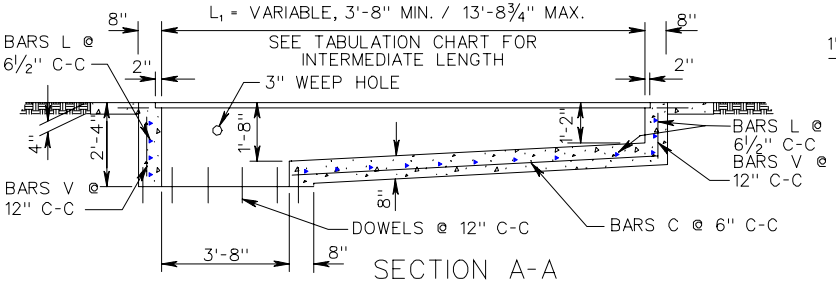

SECTION A-A
(CHAMBER NOT SHOWN)
(SLOT MAY BE CAST IN PLACE OR PRECAST)

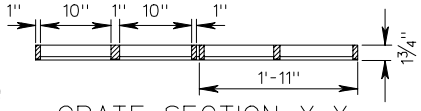

GRATE SECTION X-X

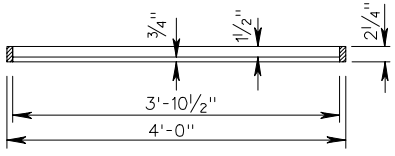

FRAME SECTION X-X

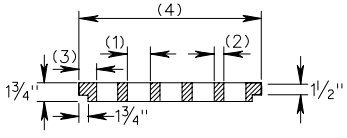

GRATE SECTION Y-Y

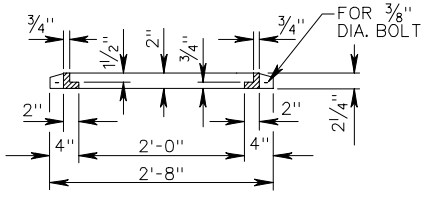

FRAME SECTION Y-Y

NOTE: SEE GRATE DIMENSION TABLE FOR GRATE TYPE I & II DIMENSIONS

LEGEND

(1) - OPENING WIDTH
(2) - BAR THICKNESS
(3) - END SECTION WIDTH
(4) - TOTAL WIDTH

GRATE DIMENSIONS				
GRATE TYPE	OPENING WIDTH	BAR THICKNESS	END SECTION WIDTH	TOTAL WIDTH
TYPE I	3¼" 5 OPENINGS	1⅜" 4 BARS	2¼"	26¼"
TYPE II	1½" 8 OPENINGS	1⅜" 7 BARS	2⁵⁄₁₆"	26¼"

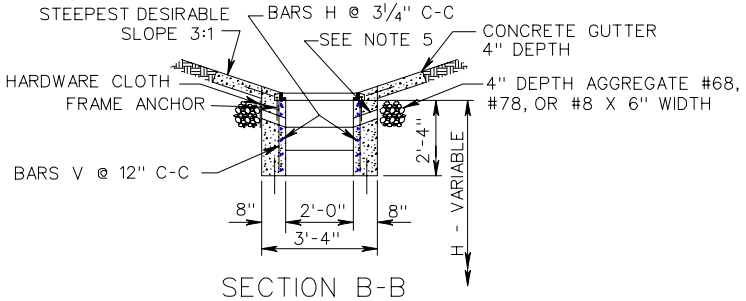

SECTION B-B
(CHAMBER NOT SHOWN)

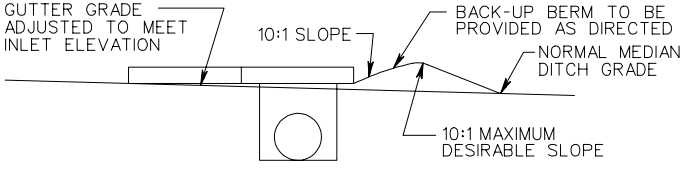

LONGITUDINAL SECTION
(WHEN INLET IS LOCATED ABOVE NORMAL DITCH GRATE)

NOTES:

1. TYPE I GRATE: LIMITED ACCESS AND RURAL UNLIMITED ACCESS: PEDESTRIAN ACCESS UNLIKELY
2. TYPE II GRATE: URBAN AREAS: PEDESTRIAN ACCESSIBLE AREAS.
3. SEE GRATE SECTION Y-Y FOR SIZE AND NUMBER OF GRATE OPENING REQUIRED FOR TYPE I AND TYPE II GRATE.
4. PAVED TRANSITION WHERE REQUIRED ON PLANS IS TO BE SHAPED TO CONFORM TO ROUNDED CONCRETE GUTTER OF DI-12A.
5. 3" DIAMETER WEEP HOLE WITH 12" X 12" PLASTIC HARDWARE CLOTH ¼" MESH OR GALVANIZED STEEL WIRE, MINIMUM WIRE DIAMETER 0.03", NUMBER 4 MESH HARDWARE CLOTH ANCHORED FIRMLY TO OUTSIDE OF STRUCTURE.
6. IF NORMAL DITCH GRADE IS TOO FLAT TO ALLOW FOR ADJUSTED GRADE TO INLET, A SPECIAL GUTTER DETAIL WILL BE REQUIRED ON PLANS.
7. GRATE BARS TO BE PARALLEL TO DITCH FLOW.

MULTIGRATE DROP INLET FOR PIPE SIZES 12" TO 72"

VIRGINIA DEPARTMENT OF TRANSPORTATION

REV. 7/05

104.31

SPECIFICATION REFERENCE

233
302