REVISED ON 7/05

DI-5

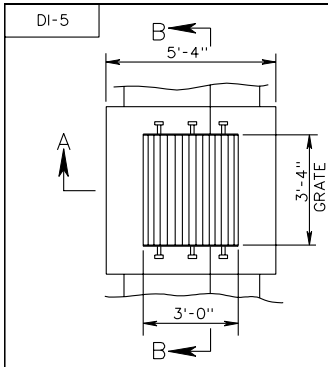


DITCH PLAN

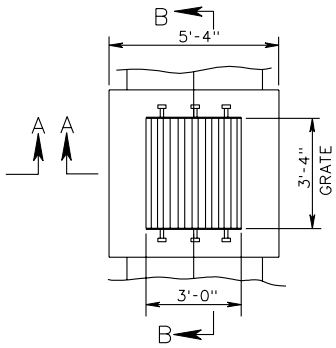


MEDIAN PLAN

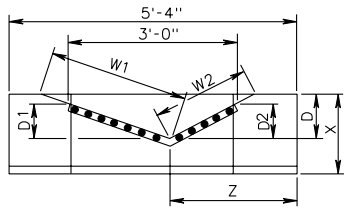


SECTION A-A

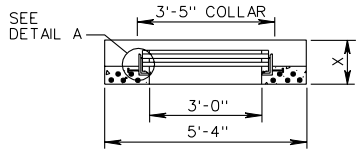


SECTION B-B

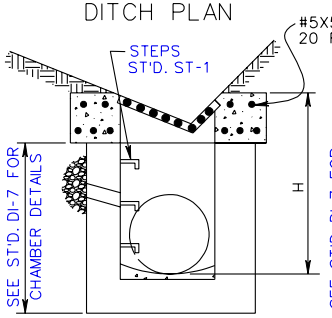


DITCH LINE SECTION

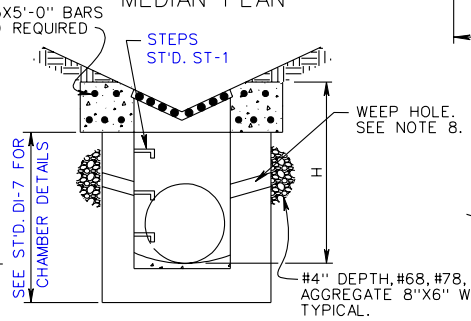


MEDIAN DITCH SECTION

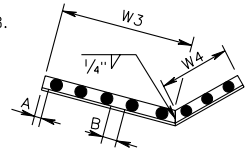


GRATE
(GALVANIZED)

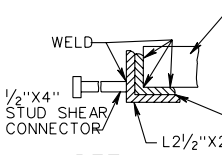


DETAIL A

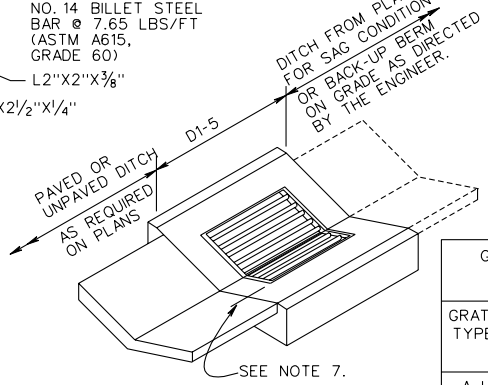


COLLAR DIMENSIONS TO BE 1/4" LARGER THAN GRATE DIMENSIONS W3 AND W4.

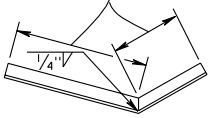


COLLAR
(GALVANIZED)

| MINIMUM H | |
|---|---|
| PIPE SIZE | H |
| 12" | 2'-9" |
| 15" | 3'-0" |
| 18" | 3'-4" |
| 24" | 3'-10" |
| 30" | 4'-5" |
| 36" | 5'-0" |
| 42" | 5'-6" |

| GRATE BAR SPACING CHART | | |
|---|---|---|
| GRATE TYPE | MAXIMUM DIMENSION | |
| | A | B |
| A I | 1 1/2" | 3" |
| A III | 1" | 1" |

## NOTES

1. DEPTH OF INLET (H) TO BE SHOWN ON PLANS.
2. THE "H" DIMENSION SHOWN ON THE STANDARDS AND SPECIFIED ON THE PLANS WILL BE MEASURED FROM THE INVERT OF THE OUTFALL PIPE TO THE TOP OF THE STRUCTURE. PLAN "H" DIMENSIONS ARE APPROXIMATE ONLY FOR ESTIMATING PURPOSES AND THE ACTUAL DIMENSIONS SHALL BE DETERMINED BY THE CONTRACTOR FROM FIELD CONDITIONS.
3. WHEN SPECIFIED ON THE PLANS THE INVERT IS TO BE SHAPED IN ACCORDANCE WITH STANDARD IS-1. THE COST OF FURNISHING AND PLACING ALL MATERIALS INCIDENTAL TO THE SHAPING IS TO BE INCLUDED IN THE BID PRICE FOR THE STRUCTURE.
4. IN THE EVENT THE INVERT OF THE OUTFALL PIPE IS HIGHER THAN THE BOTTOM OF THE STRUCTURE, THE INVERT OF THE STRUCTURE SHALL BE SHAPED WITH CEMENT MORTAR TO PREVENT STANDING OR PONDING OF WATER IN THE STRUCTURE. THE COST OF FURNISHING AND PLACING ALL MATERIALS INCIDENTAL TO THE SHAPING IS TO BE INCLUDED IN THE BID PRICE FOR THE STRUCTURE.
5. STEPS ARE TO BE PROVIDED WHEN H IS 4'-0" OR GREATER. FOR DETAILS SEE STANDARD ST-1.
6. CHAMBER MAY BE CAST IN PLACE, PRECAST, BRICK OR CONCRETE BLOCK. SEE DI-7 FOR DETAILS.
7. WHERE PAVED DITCHES ARE REQUIRED, JOINTS ARE TO BE DOWELED WITH #4 X 8" SMOOTH RODS AT APPROXIMATELY 12" C-C IN ALL AREAS ADJACENT TO ABUTTING CONCRETE TO PREVENT SETTLEMENT. IN LIEU OF DOWELS A 2" X 4" NOTCH MAY BE PROVIDED. SEE ST'D T-DI-3, 4 FOR ALTERNATE DESIGN.
8. 3" DIAMETER WEEP HOLE TO BE LOCATED TO DRAIN SUBBASE MATERIAL. WEEP HOLE WITH 12"X12" PLASTIC HARDWARE CLOTH 1/4" MESH OR GALVANIZED STEEL WIRE, MINIMUM WIRE DIAMETER 0.03", NUMBER 4 MESH HARDWARE CLOTH ANCHORED FIRMLY TO THE OUTSIDE OF THE STRUCTURE.
9. ALL REINFORCING STEEL SHALL HAVE A MIN. COVER OF 2".
10. ALL REINFORCING STEEL TO BE CUT CLEAR OF ALL OPENINGS BY 2".
11. CAST-IN PLACE CONCRETE IS TO BE CLASS A3 (3000 PSI). PRECAST CONCRETE IS TO BE 4000 PSI.
12. PROVIDE SAFETY SLABS WHEN SPECIFIED ON THE PLANS.

✱TOLERANCE 1/2" ±

| ST'D PG-2A TYPE | COVER DIMENSIONS AND QUANTITIES | | | | | | | | |
|---|---|---|---|---|---|---|---|---|---|
| | W1 | W2 | W3 | W4 | ✱D | D1 | D2 | X | Z |
| A1,A2,A3 | 3'-0 1/2" | 2'-0 3/4" | 2'-0 5/16" | 1'-0 3/8" | 6" | 4" | 3" | 14" | 2'-2" |
| B1,B2,B3,B4 C1,C2,C3 | 2'-9" | 2'-9" | 1'-6 9/16" | 1'-6 9/16" | 8" | 4 1/2" | 4 1/2" | 16" | 2'-8" |
| E | 2'-3" | 2'-3" | 1'-8 1/16" | 1'-8 1/16" | 12" | 9" | 9" | 19" | 2'-8" |

# STANDARD DITCH DROP INLET

VIRGINIA DEPARTMENT OF TRANSPORTATION

SPECIFICATION REFERENCE

233
302

104.21