MH-1A

NOTES:
THE LETTERS V.D.O.T. ARE OPTIONAL, IF USED THE LETTERS ARE TO BE CAST IN THE DEPRESSION IN TOP OF COVER 1" WIDE AND RAISED 3/8" HIGH AS SHOWN.

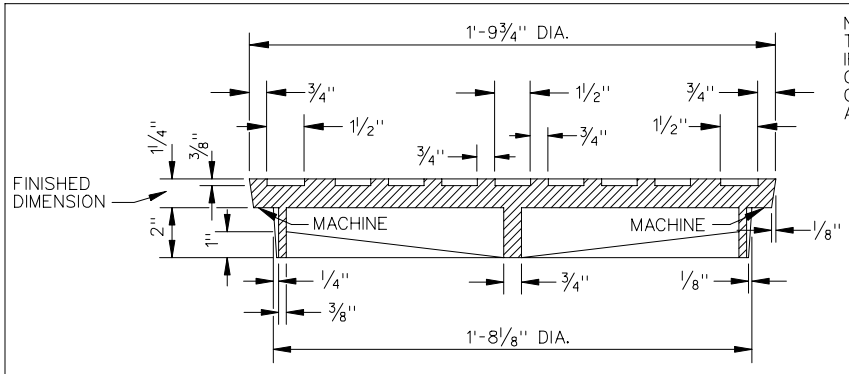

SECTION A-A

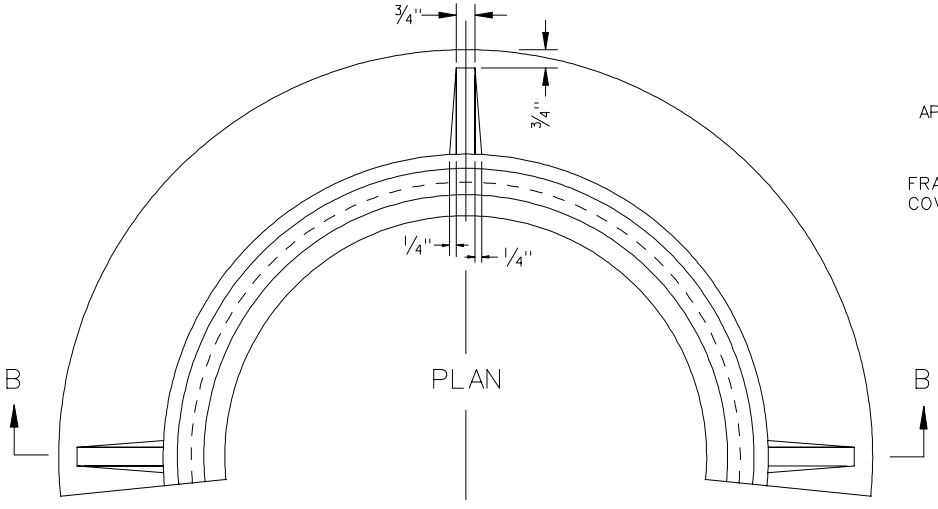

PLAN

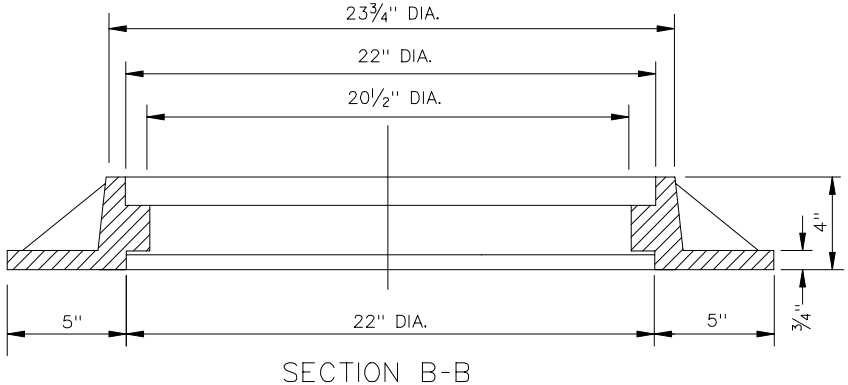

SECTION B-B

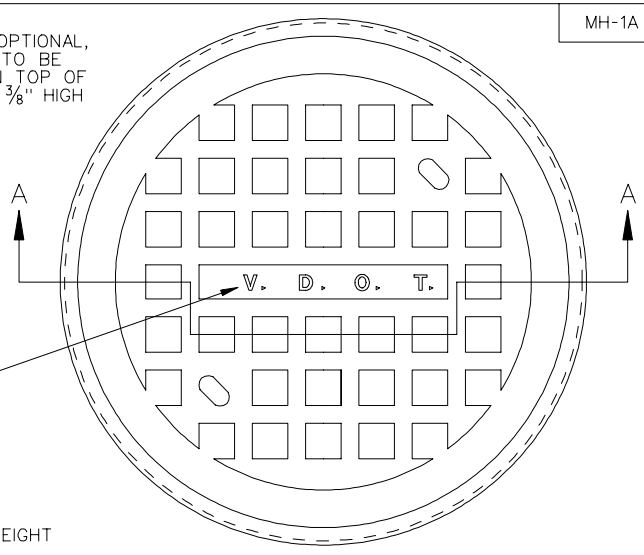

TOP

APPROXIMATE WEIGHT

CAST IRON

FRAME 174 ± 9 LBS.
COVER 137 ± 7 LBS.

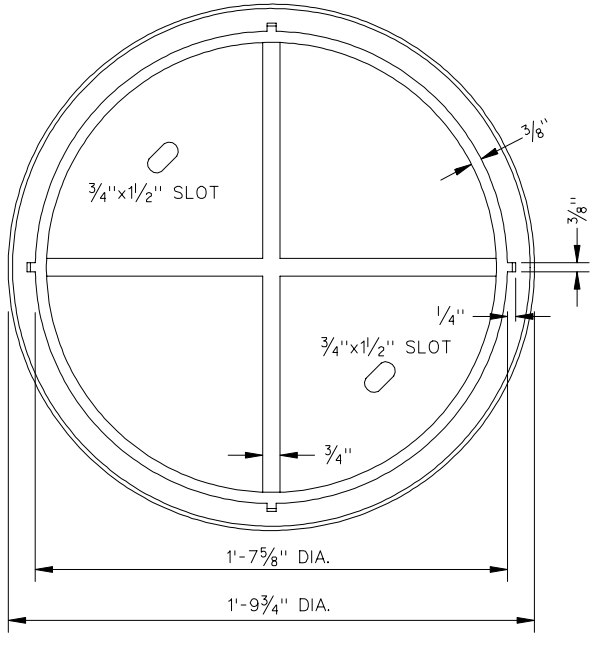

BOTTOM

SPECIFICATION REFERENCE
224 302

STANDARD MANHOLE FRAME AND COVER

VIRGINIA DEPARTMENT OF TRANSPORTATION

106.06