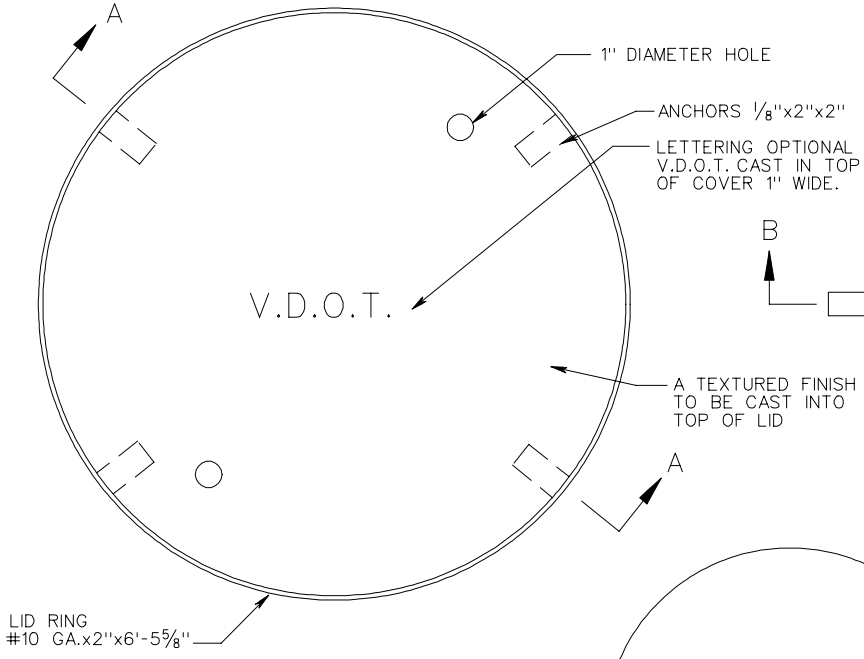

PLAN VIEW COVER

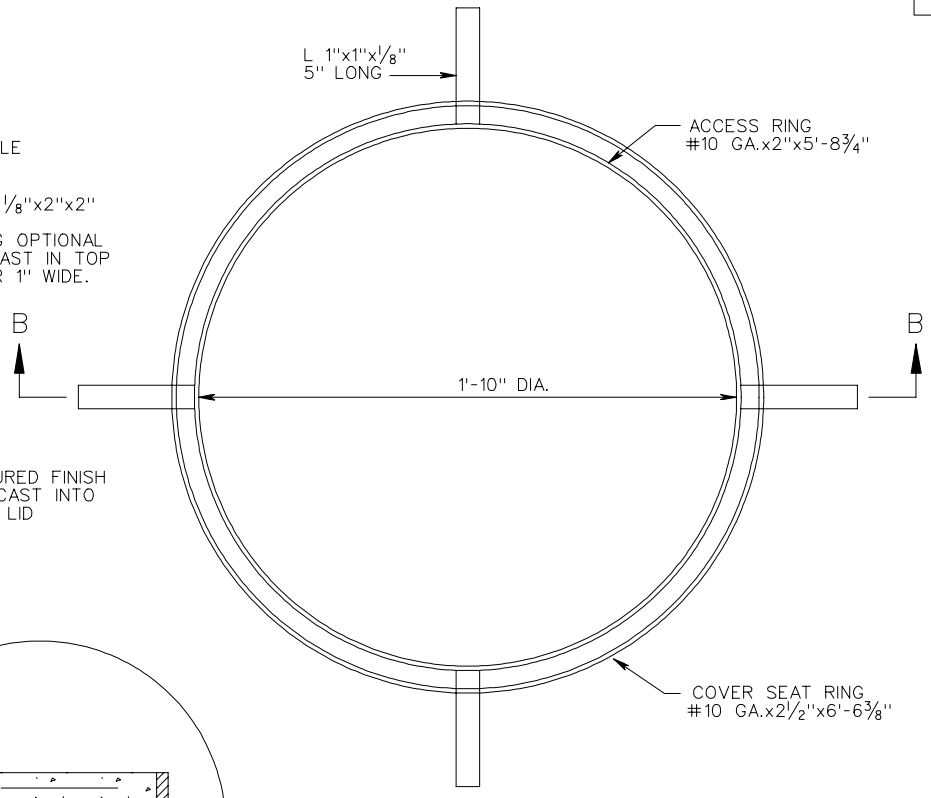

PLAN VIEW FRAME

NOTE:
CONCRETE 4000 PSI
SUPPLIER MAY FURNISH 1/8" STEEL FOR 10 GA.
ALL METAL GALVANIZED TO V.D.O.T.
STANDARD AND ASTM A 123-73.

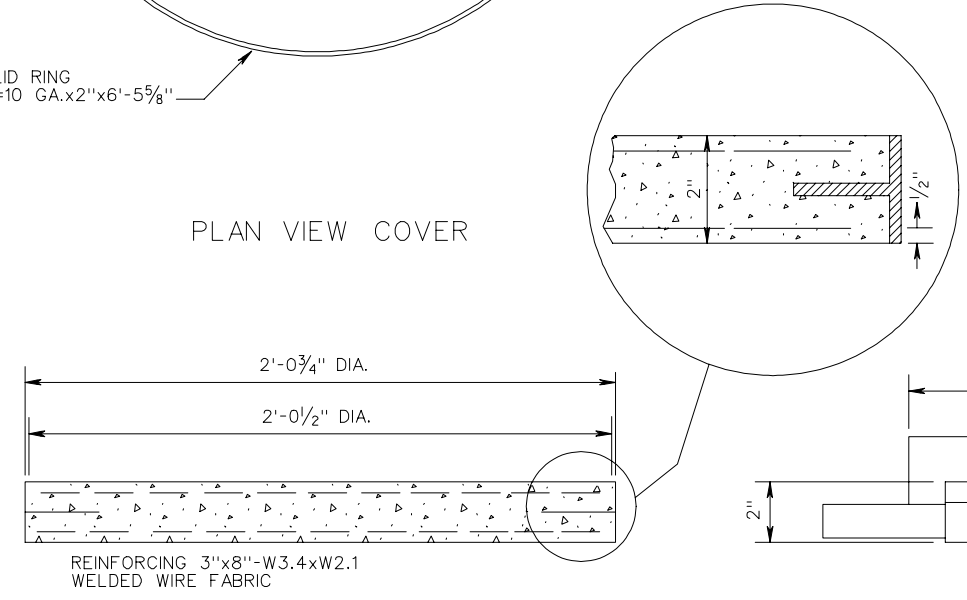

SECTION A-A

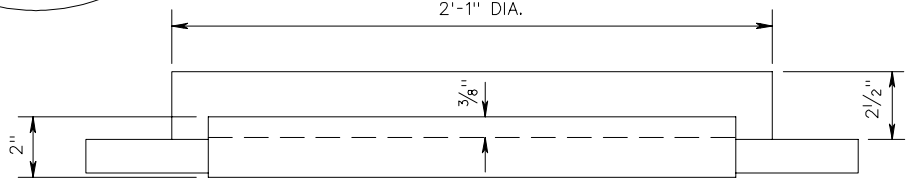

SECTION B-B

SHEET 3 OF 3

SPECIFICATION REFERENCE
105 302

PRECAST INLET AND FRAME COVER

VIRGINIA DEPARTMENT OF TRANSPORTATION