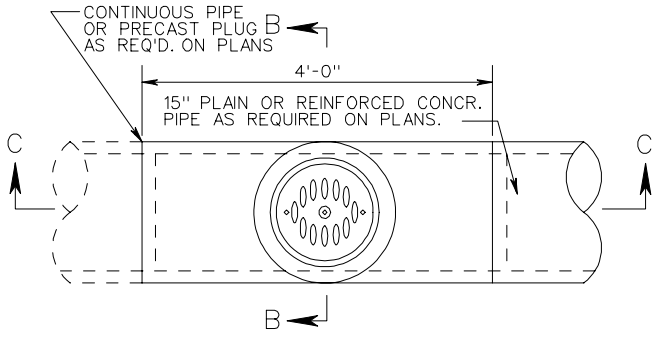

PLAN

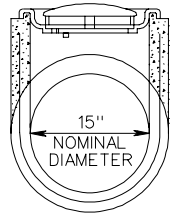

SECTION B-B

NOTES

1. PRECAST PIPE PLUG SHALL BE SET IN FRESH MORTAR.
2. PRECAST PLUG SHALL COMFORM TO PIPE MANUFACTURER'S JOINT DESIGN AND SHALL HAVE A MINIMUM THICKNESS NOT LESS THAN PIPE WALL THICKNESS.
3. THIS INLET IS TO BE USED ONLY IN LOCATIONS NOT SUBJECT TO TRAFFIC.
4. FRAME IS TO BE SECURELY MORTARED TO TEE SECTION.
5. FRAME AND GRATE SHALL BE GRAY IRON, ASTM A48, CLASS 30S.
6. THE PRECAST TEE UNIT IS TO COMFORM TO THE REQUIREMENTS OF AASHTO M170 FOR 15" CLASS III REINFORCED CONCRETE PIPE.
7. IF A PRECAST PLUG IS NEEDED, THE COST OF THE PRECAST PLUG SHALL BE INCLUDED IN THE PRICE BID FOR DI-9.

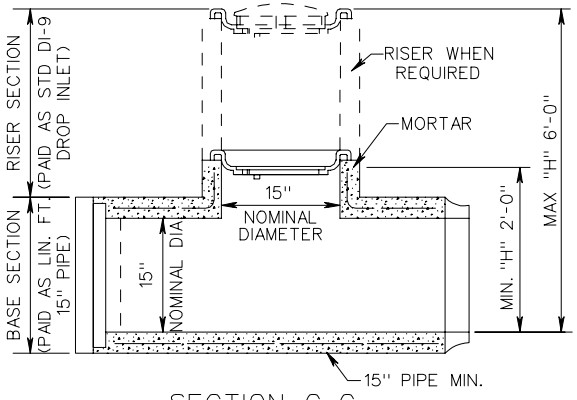

SECTION C-C

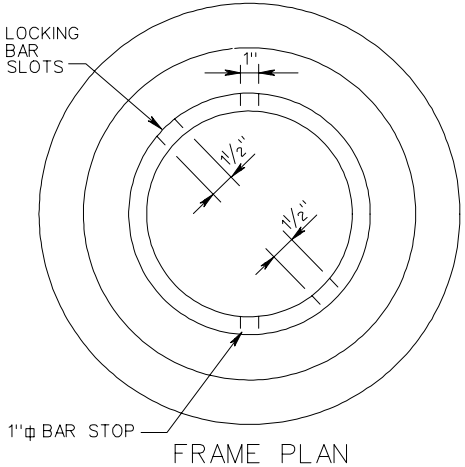

FRAME PLAN

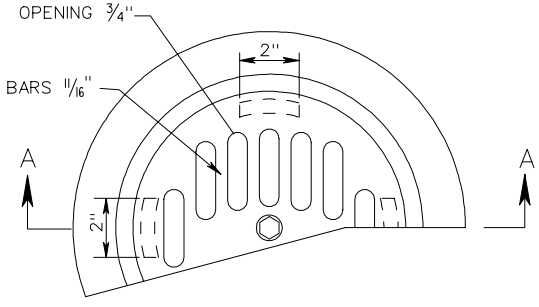

PART PLAN FRAME & GRATE

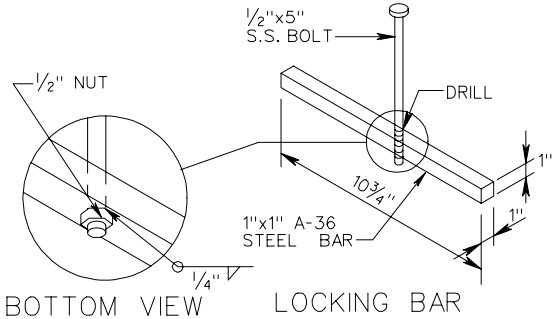

BOTTOM VIEW

LOCKING BAR

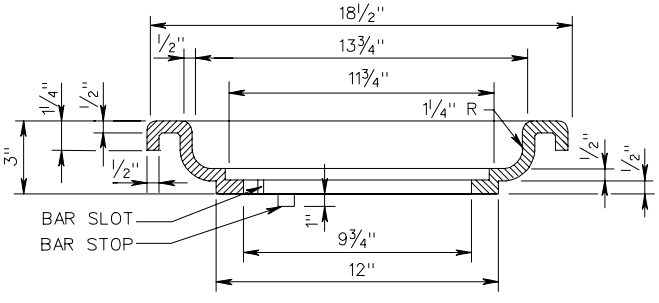

SECTION A-A FRAME

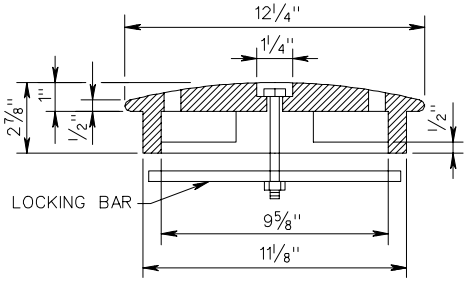

SECTION A-A GRATE

15" PIPE TEE SECTION DROP INLET

VIRGINIA DEPARTMENT OF TRANSPORTATION

SPECIFICATION REFERENCE
233 302

Rev. 7/04

104.25