DETAIL

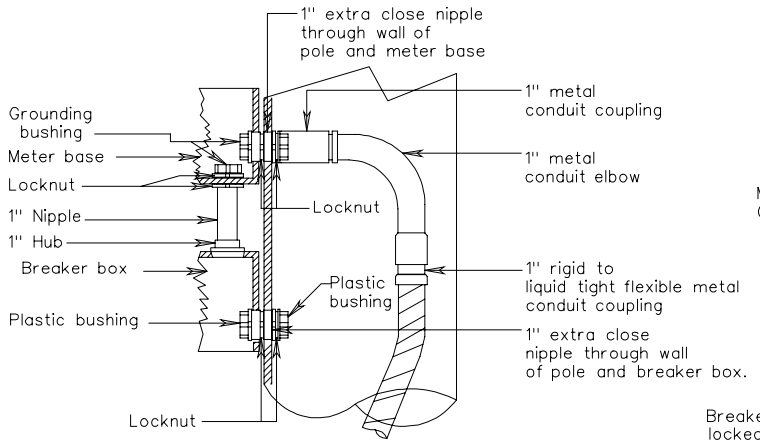

ALTERNATE DETAIL

(Used when meter base not required)

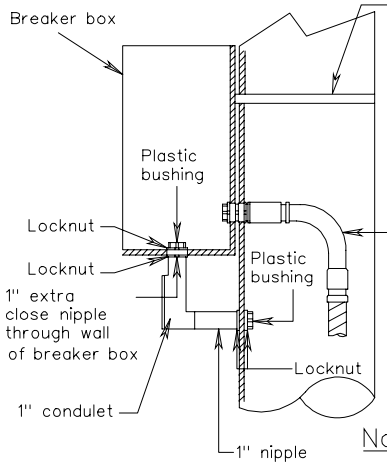

Concrete pad required when mounted on pole in earth areas. (See standard CTE-1 for pad detail)

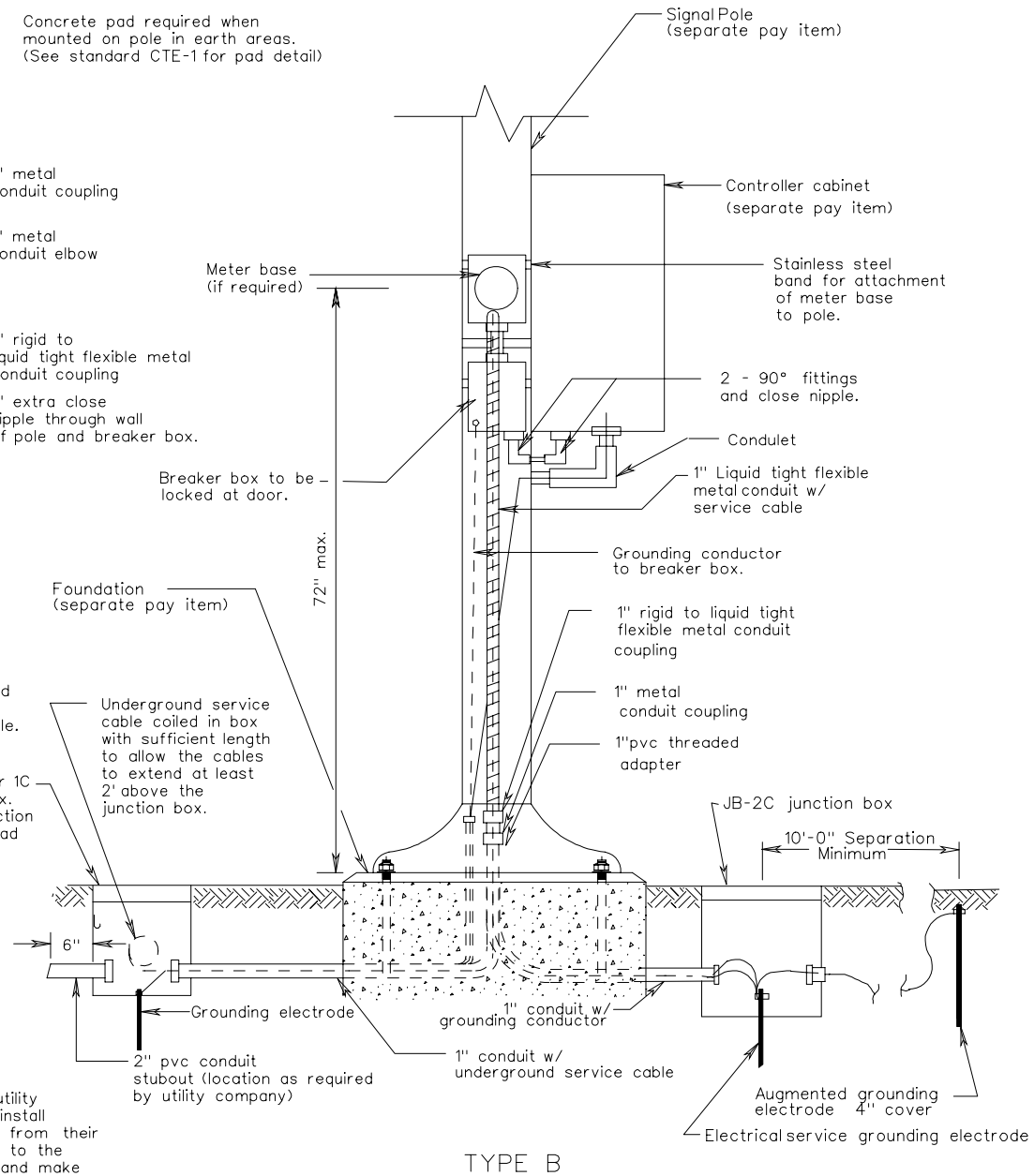

TYPE B

Note: Local power utility company will install service cable from their power source to the junction box and make required splices to the service cable coiled in the junction box.

ELECTRICAL SERVICE DETAILS
SIGNAL INSTALLATION

VIRGINIA DEPARTMENT OF TRANSPORTATION

REV. 2/06