NOTE:
THE LETTERS V.D.O.T. ARE OPTIONAL, IF USED THE LETTERS ARE TO BE CAST IN THE DEPRESSION IN TOP OF THE COVER 1" WIDE AND RAISED 1/4" HIGH AS SHOWN.

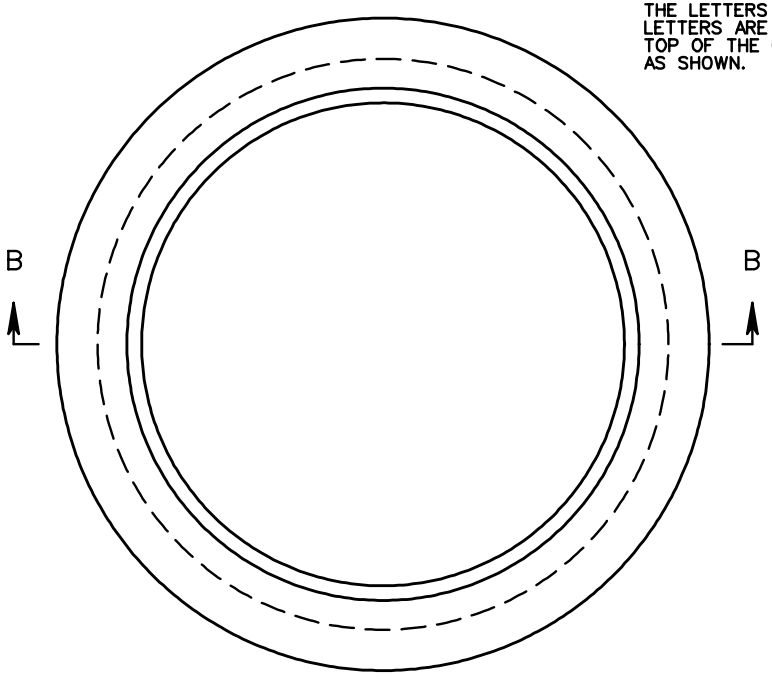

FRAME

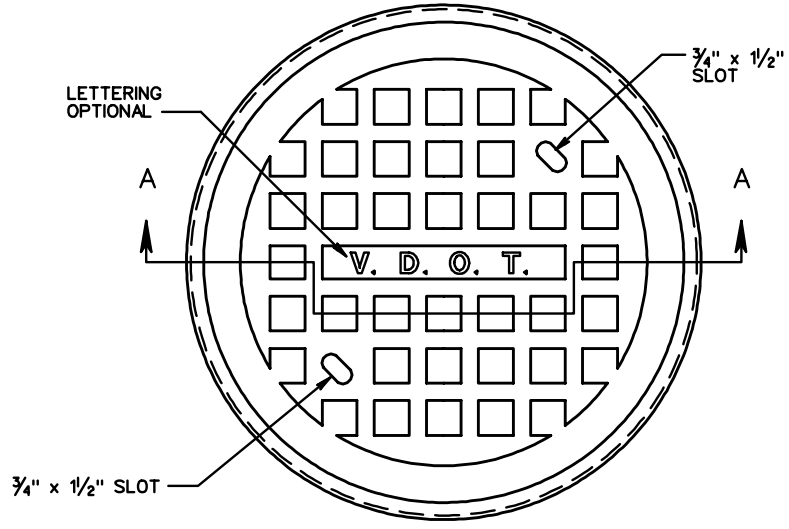

COVER

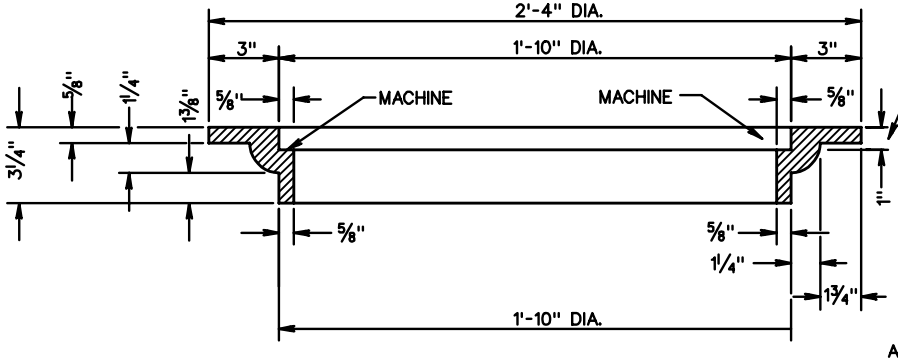

SECTION B-B

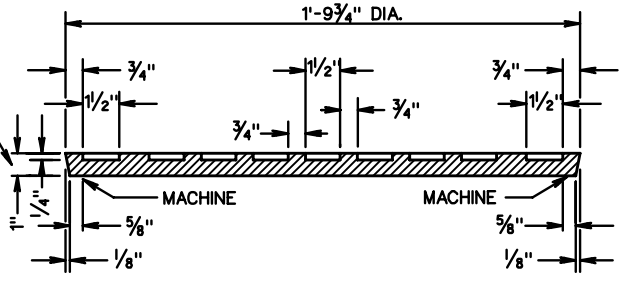

SECTION A-A

APPROXIMATE WEIGHT
CAST IRON

FRAME 86 ± 4 LBS.
COVER 83 ± 4 LBS.

SHEET 1 OF 3

SPECIFICATION REFERENCE
224 302

STANDARD INLET AND FRAME COVER

VIRGINIA DEPARTMENT OF TRANSPORTATION