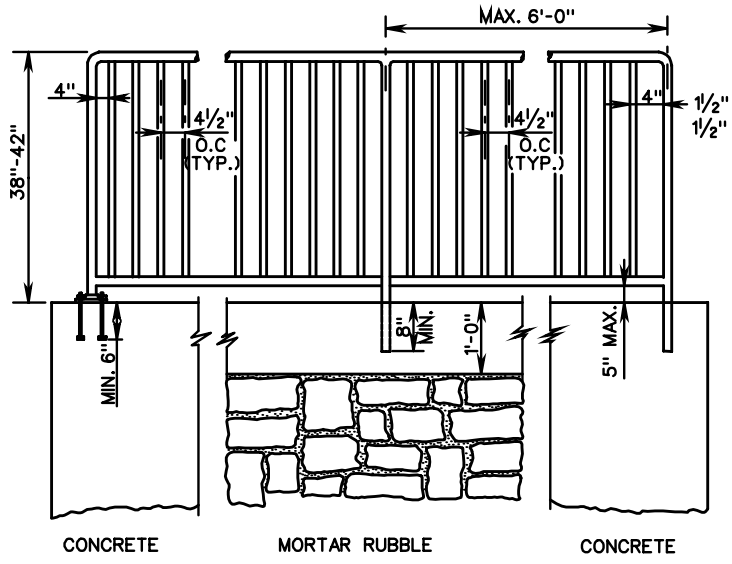

HANDRAIL (GUARD) INSTALLATION ON WALLS

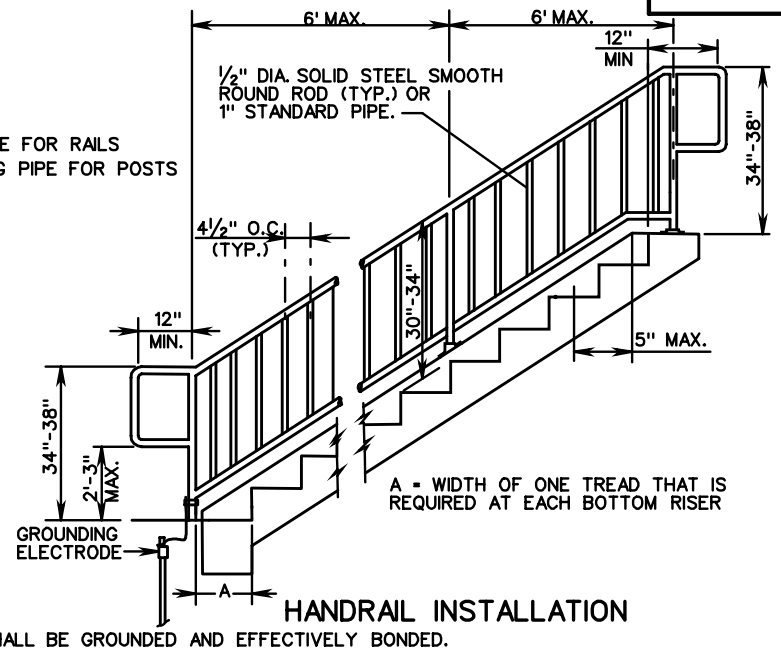

HANDRAIL INSTALLATION

HANDRAILS SHALL BE GROUNDED AND EFFECTIVELY BONDED.
GROUNDING MATERIALS INSTALLATION TO BE IN ACCORDANCE WITH ST'D. FE-6.

FOR ALL DETAILS AND DIMENSIONS NOT SHOWN SEE ST'D. FE-CL.

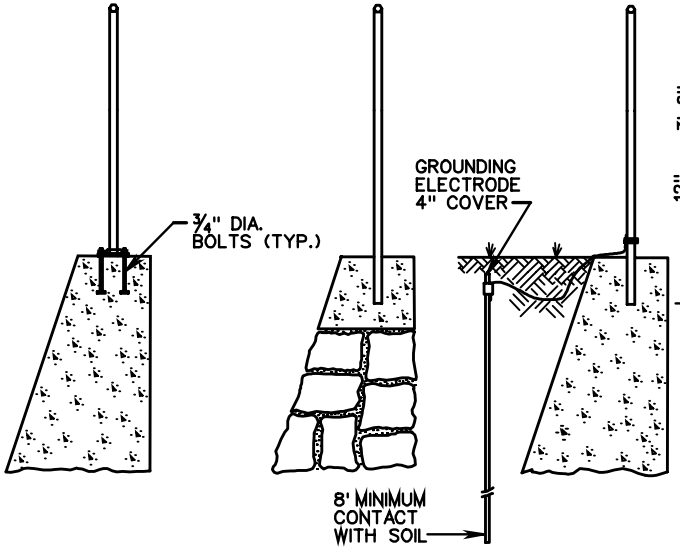

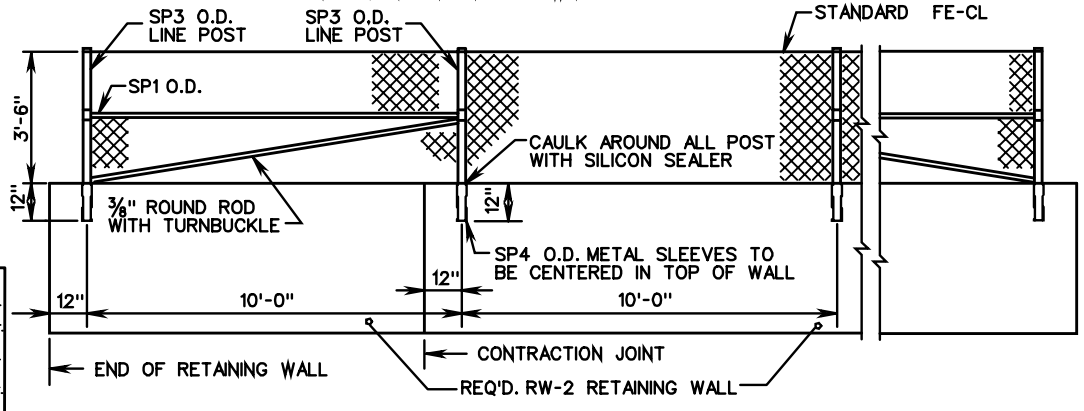

ALTERNATE INSTALLATION ON WALLS

NOTES:
THIS HANDRAIL IS TO BE USED ONLY AS A PROTECTION FOR PEDESTRIANS AND SHOULD NOT BE PLACED IN ANY LOCATION WHERE IT MIGHT BE SUBJECT TO ANY VEHICULAR IMPACT FOR VEHICULAR PROTECTION STANDARD GUARDRAIL SHOULD BE USED.

HANDRAIL TO BE IN ACCORDANCE WITH THE LATEST EDITION OF THE VIRGINIA UNIFORM STATEWIDE BUILDING CODE.

SPECIFICATION REFERENCE	STANDARD HANDRAIL METHOD OF LOCATING AND ERECTING VIRGINIA DEPARTMENT OF TRANSPORTATION	VDOT ROAD AND BRIDGE STANDARDS	
504		REVISION DATE	SHEET 1 OF 1 601.05