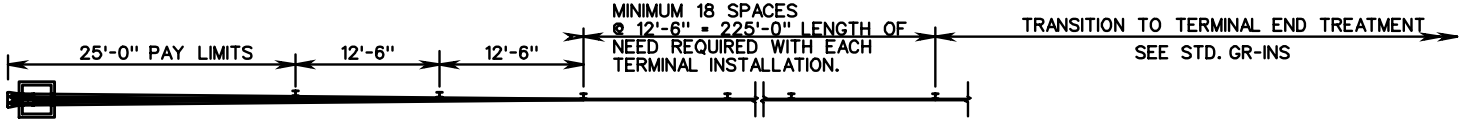

PLAN

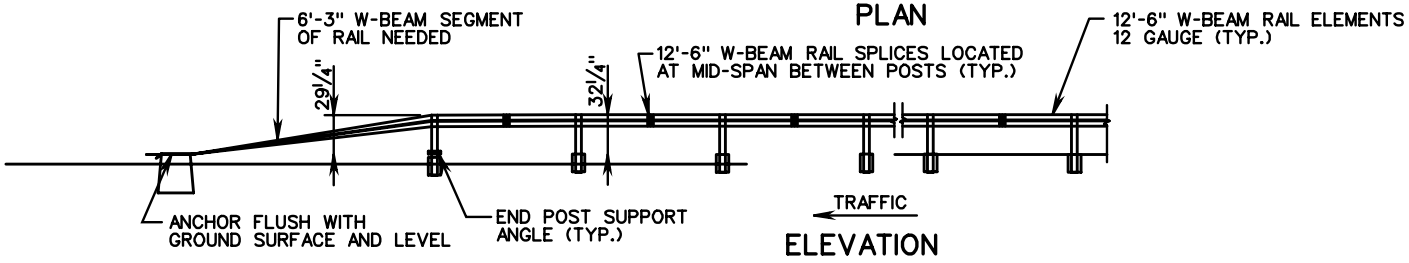

ELEVATION

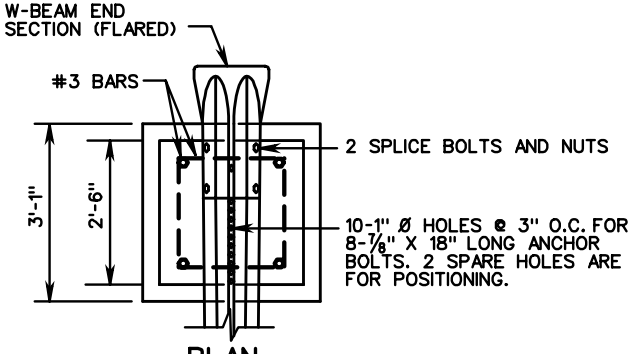

PLAN

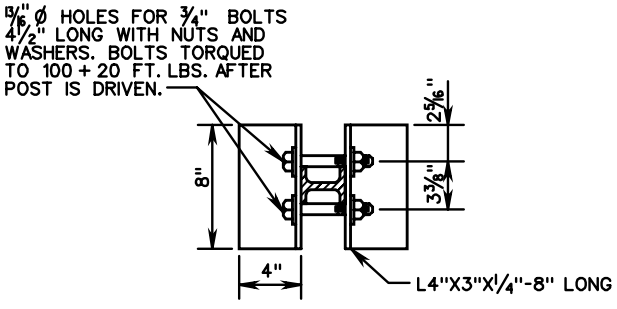

END POST SUPPORT ANGLES

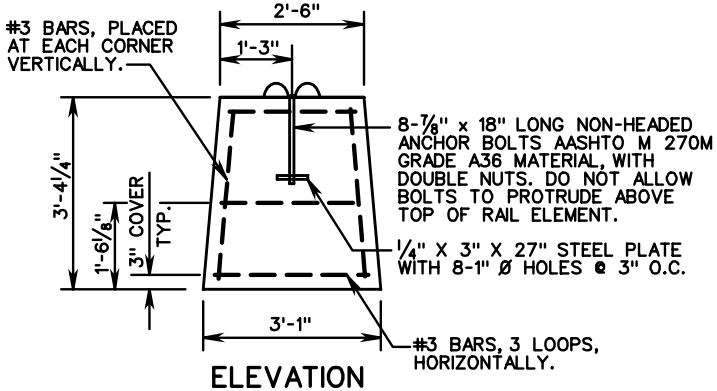

ELEVATION
ANCHOR BLOCK DETAILS

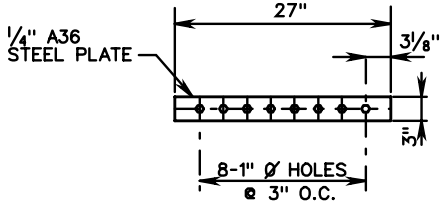

STEEL PLATE

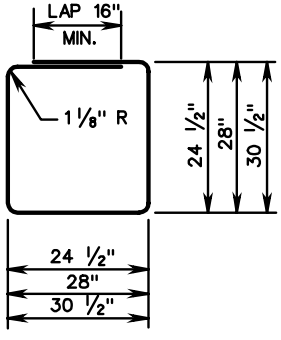

#3 LOOP BAR
REINFORCING DETAILS

GR-8 TYPE II TERMINAL TREATMENT
(RUN-OFF ANCHORAGE)

SPECIFICATION REFERENCE	STANDARD W-BEAM GUARDRAIL (WEAK POST SYSTEM)	VDOT ROAD AND BRIDGE STANDARDS
221 505	TL-3 (>45 MPH) VIRGINIA DEPARTMENT OF TRANSPORTATION	REVISION DATE / SHEET 2 OF 2 501.15