GR-6

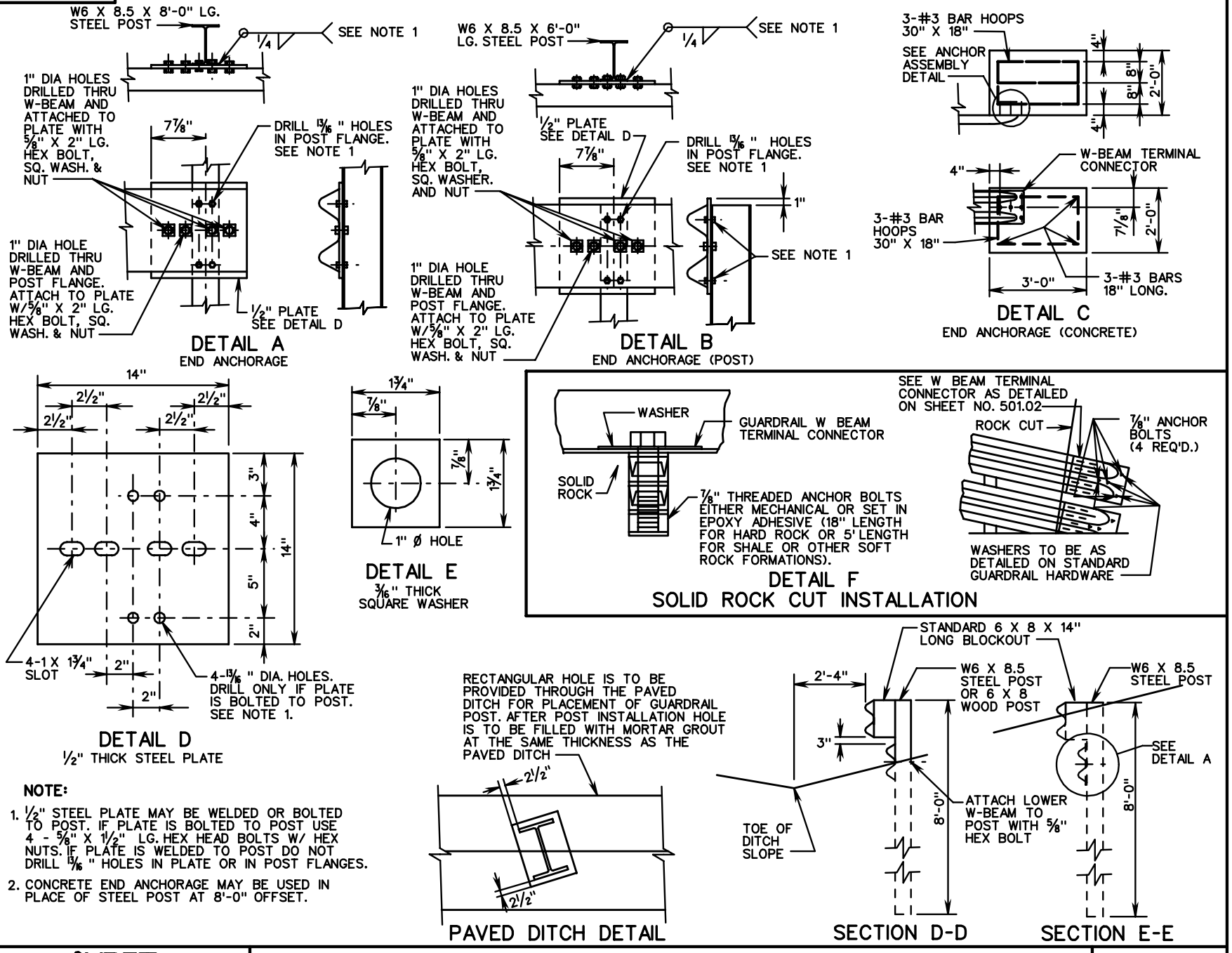


**NOTE:**

1. 1/2" STEEL PLATE MAY BE WELDED OR BOLTED TO POST. IF PLATE IS BOLTED TO POST USE 4 - 5/8" X 1 1/2" LG. HEX HEAD BOLTS W/ HEX NUTS. IF PLATE IS WELDED TO POST DO NOT DRILL 13/16" HOLES IN PLATE OR IN POST FLANGES.
2. CONCRETE END ANCHORAGE MAY BE USED IN PLACE OF STEEL POST AT 8'-0" OFFSET.

| | | | |
|---|---|---|---|
| VDOT ROAD AND BRIDGE STANDARDS | TERMINAL TREATMENT FOR W-BEAM GUARDRAIL | | SPECIFICATION REFERENCE |
| SHEET 2 OF 2 | REVISION DATE | | 221 |
| 501.10 | | VIRGINIA DEPARTMENT OF TRANSPORTATION | 505 |