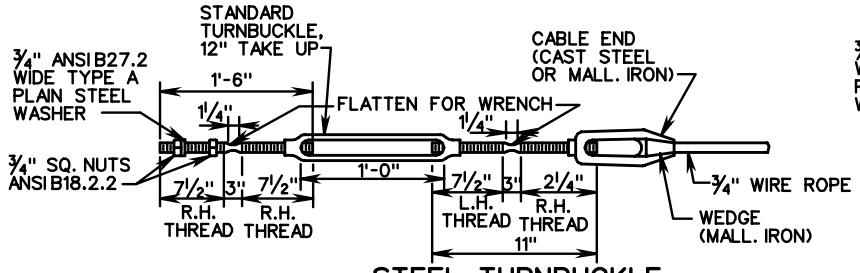

STEEL TURNBUCKLE
CABLE END ASSEMBLY

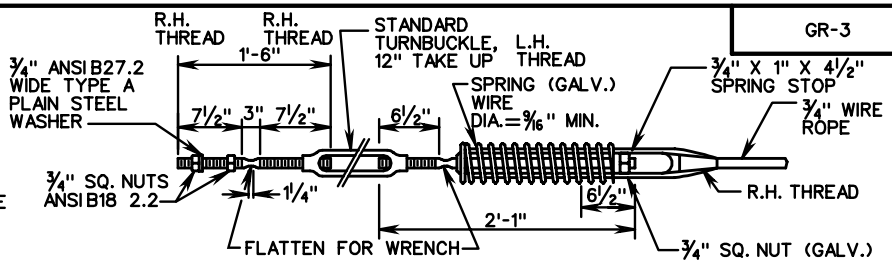

SPRING CABLE END ASSEMBLY
(COMPENSATING DEVICE)

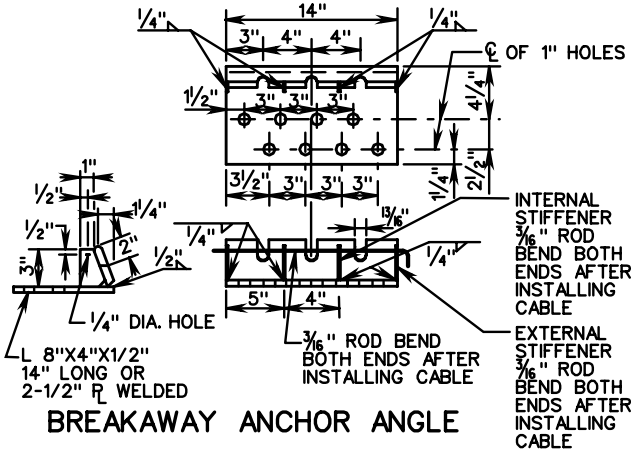

BREAKAWAY ANCHOR ANGLE

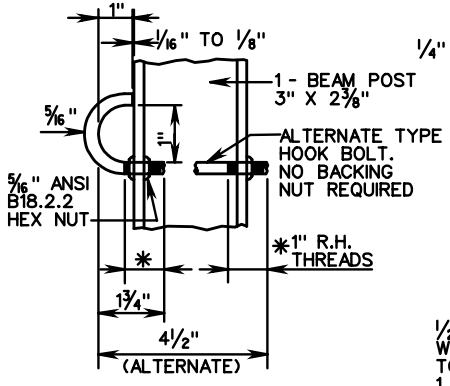

HOOK BOLTS

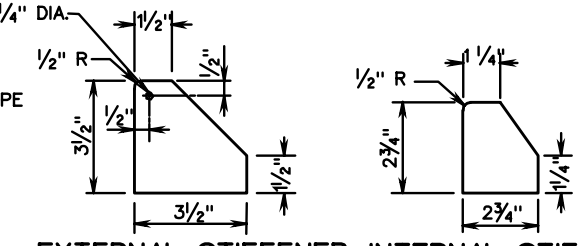

EXTERNAL STIFFENER INTERNAL STIFFENER

1/2" X 1/16" BOLT 2 1/2" LONG. W/NUT & 3 WASHERS. TORQUE TO 25 ft-lb. 1 WASHER UNDER HEAD. 1 BETWEEN STIFFENERS. 1 UNDER NUT. ADDITIONAL 1/16" THICK WASHER MAY BE PLACED BETWEEN STIFFENERS TO PLUMB THE ANCHOR POST.

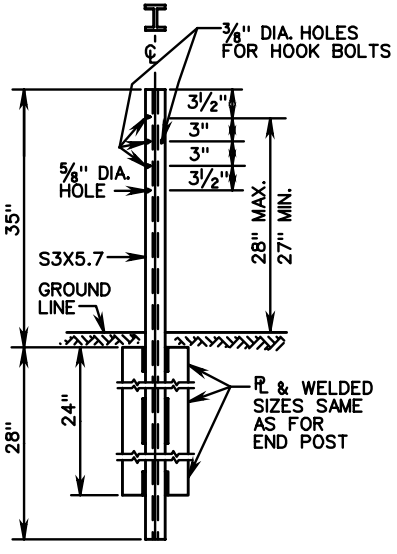

INTERMEDIATE POST DETAIL

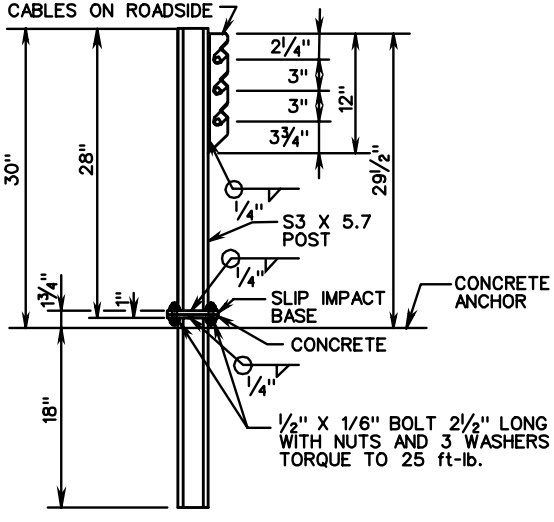

ANCHOR POST DETAIL
(SHOWN FOR LEFT HANDED ANCHOR)

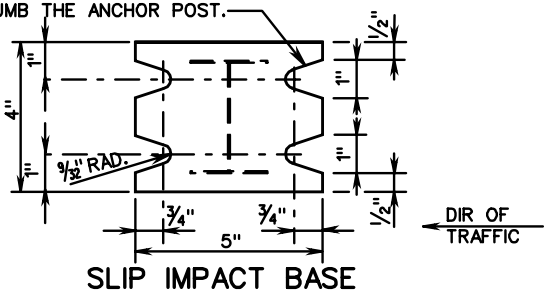

SLIP IMPACT BASE
(KEEPER PLATE NOT SHOWN)

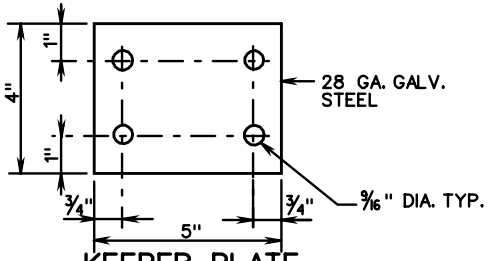

KEEPER PLATE

SPECIFICATION REFERENCE	CABLE GUARDRAIL	VDOT ROAD AND BRIDGE STANDARDS
221 505	VIRGINIA DEPARTMENT OF TRANSPORTATION	REVISION DATE / SHEET 2 OF 3 / 501.07