WF&C-1

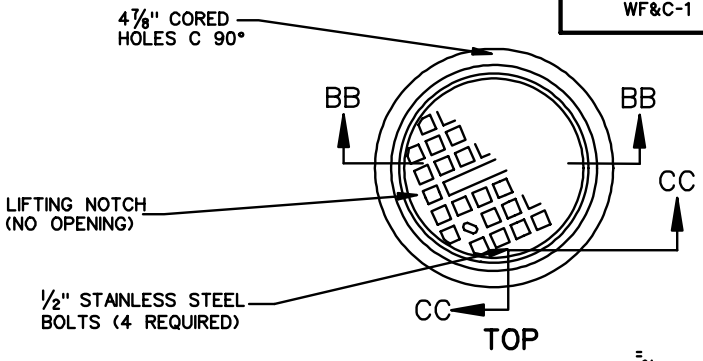

TOP

APPROXIMATE WEIGHTS

FRAME	220±	11 LBS.
COVER	260±	13LBS.
TOTAL	480±	24LBS.

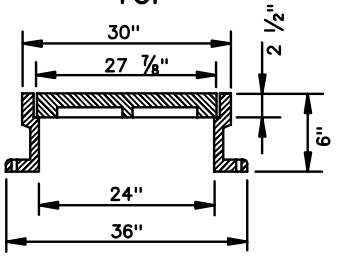

SECTION BB - BB

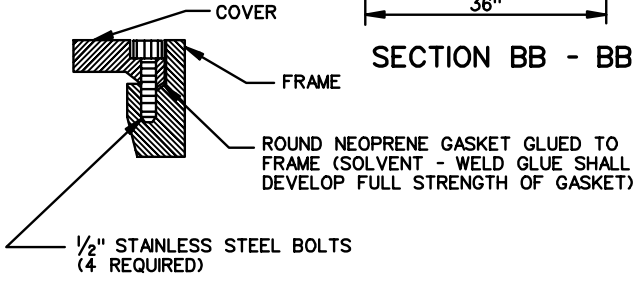

SECTION CC - CC

1. DETAILS NOT SHOWN ARE AS REQUIRED FOR ST'D F&C-1 M.H. FRAME AND COVER.
2. FRAME SHALL BE SET IN 1/4" BED OF NON-SAG JOINT SEALER & BOLTED TO THE MANHOLE CONE SECTION WITH 4 3/4" ANCHOR BOLTS.
3. CAST IRON SHALL CONFORM TO ASTM A-48, CLASS 30S.
4. SEATING SURFACES BETWEEN FRAME AND COVER SHALL BE MACHINED.
5. 1/4" x 1" CONTINUOUS NEOPRENE GASKET SHALL BE INSTALLED BETWEEN THE INNER COVER AND THE FRAME.
6. RECESSED PICK HOLE SHALL NOT EXTEND THRU THE COVER.

WATERTIGHT MANHOLE FRAME AND COVER

F&C-1

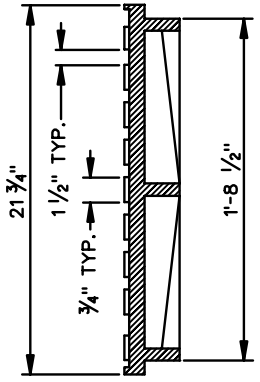

SECTION A-A

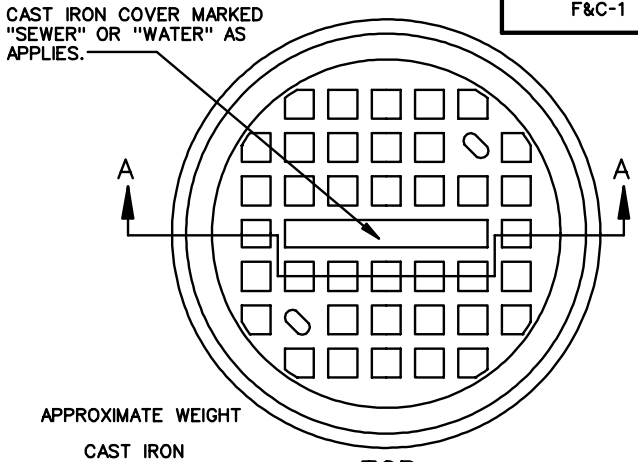

APPROXIMATE WEIGHT

CAST IRON
FRAME 239 ± 12 LBS.
COVER 137 ± 7 LBS.

TOP

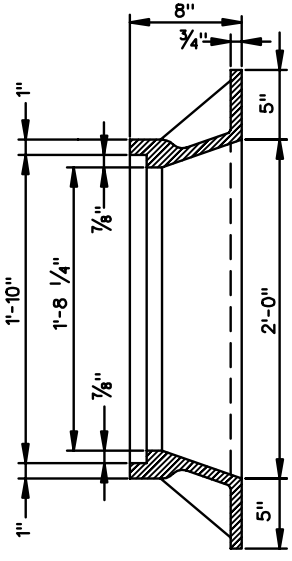

SECTION B-B

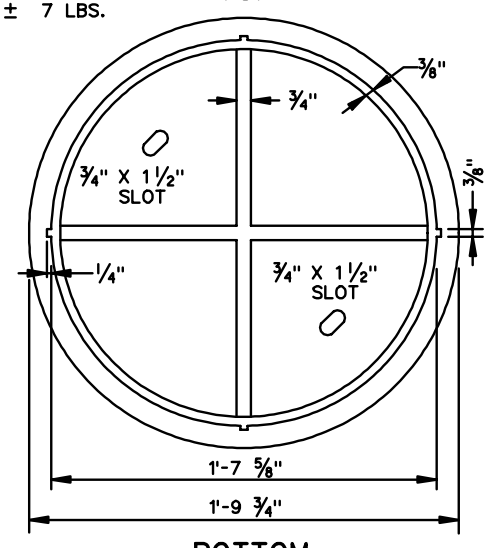

BOTTOM

NOTES:

1. CAST IRON SHALL CONFORM TO ASTM A-48M, CLASS 30S.
2. CASTING AND FRAME ARE TO BE MACHINED TO ENSURE A FIRM TIGHT FIT.
3. DIMENSIONS NOT SHOWN ARE THE SAME AS STANDARD MH-1 FRAME AND COVER.

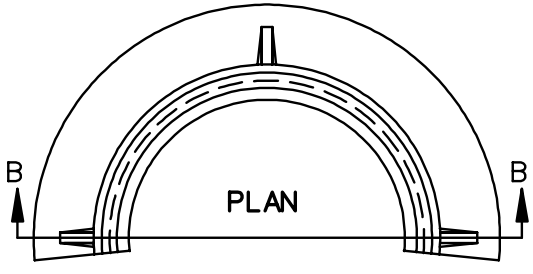

MANHOLE FRAME AND COVER

SPECIFICATION REFERENCE	WATER AND SANITARY SEWER FACILITIES VIRGINIA DEPARTMENT OF TRANSPORTATION	VDOT ROAD AND BRIDGE STANDARDS	
		REVISION DATE	SHEET 1 OF 1
			1412.01