SPD-4

TYPE VA-A

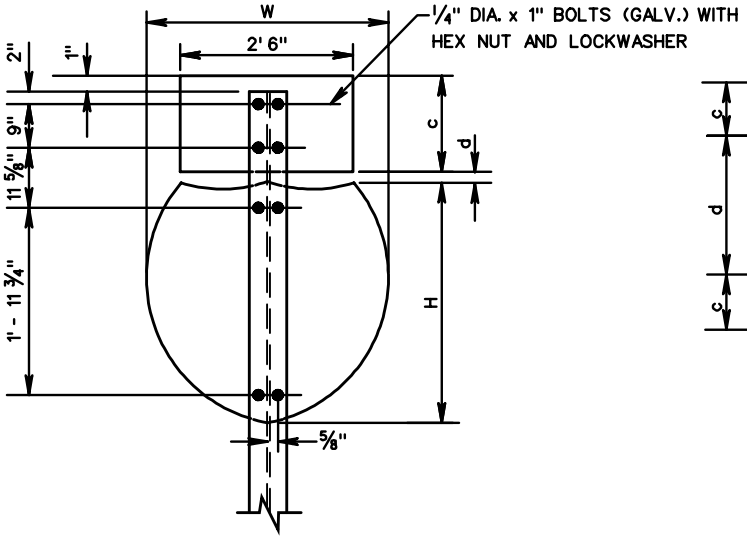

TYPES VA-B, VA-C, VA-D, VA-E, VA-L AND VA-M

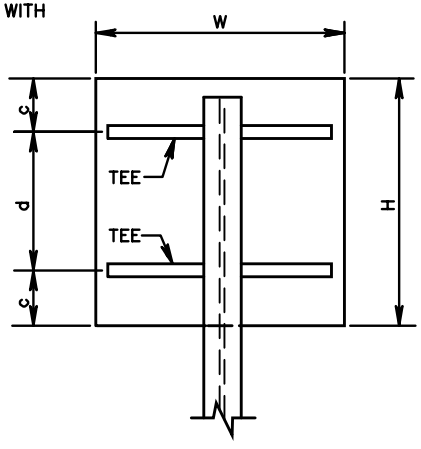

TYPE VA-F

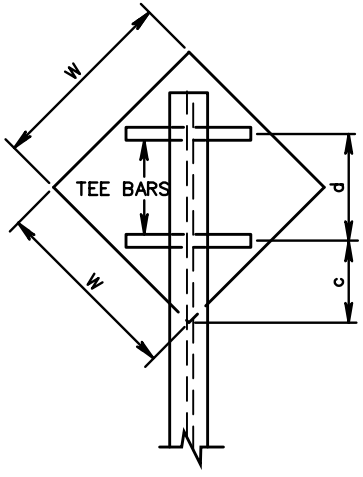

UNLESS OTHERWISE NOTED THE TOP OF THE SIGN PANEL SHALL NOT EXTEND ABOVE THE SIGN POST NO GREATER THAN THE DISTANCE OF 1/2 C

TYPE VA-G

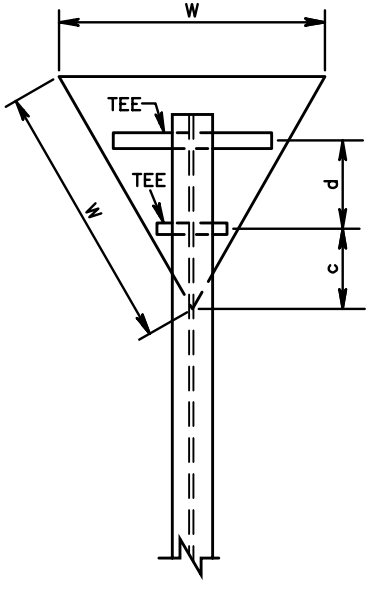

TYPE VA-K

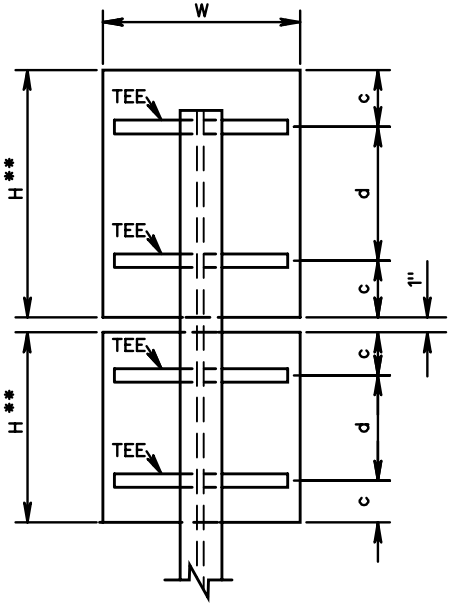

TYPE VA-A2

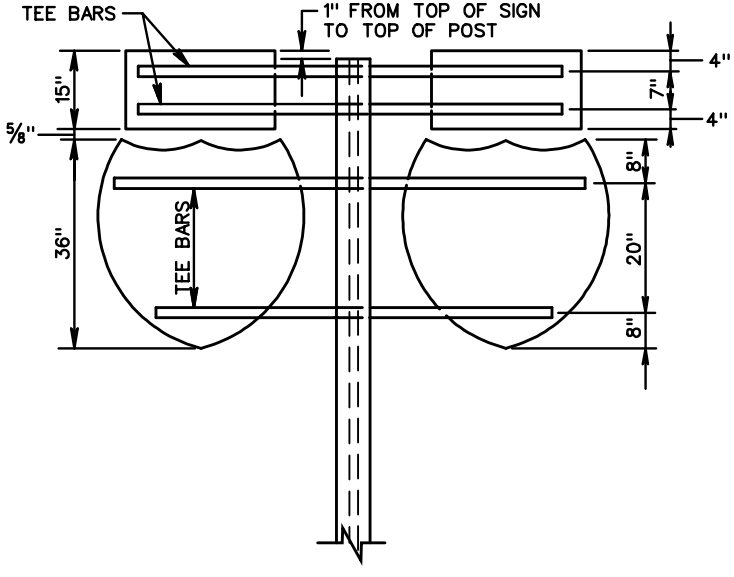

VDOT ROAD AND BRIDGE STANDARDS	SIGN PANEL DESIGN	SPECIFICATION REFERENCE
SHEET 1 OF 2	REVISION DATE	701
1325.40	VIRGINIA DEPARTMENT OF TRANSPORTATION	