WD-2

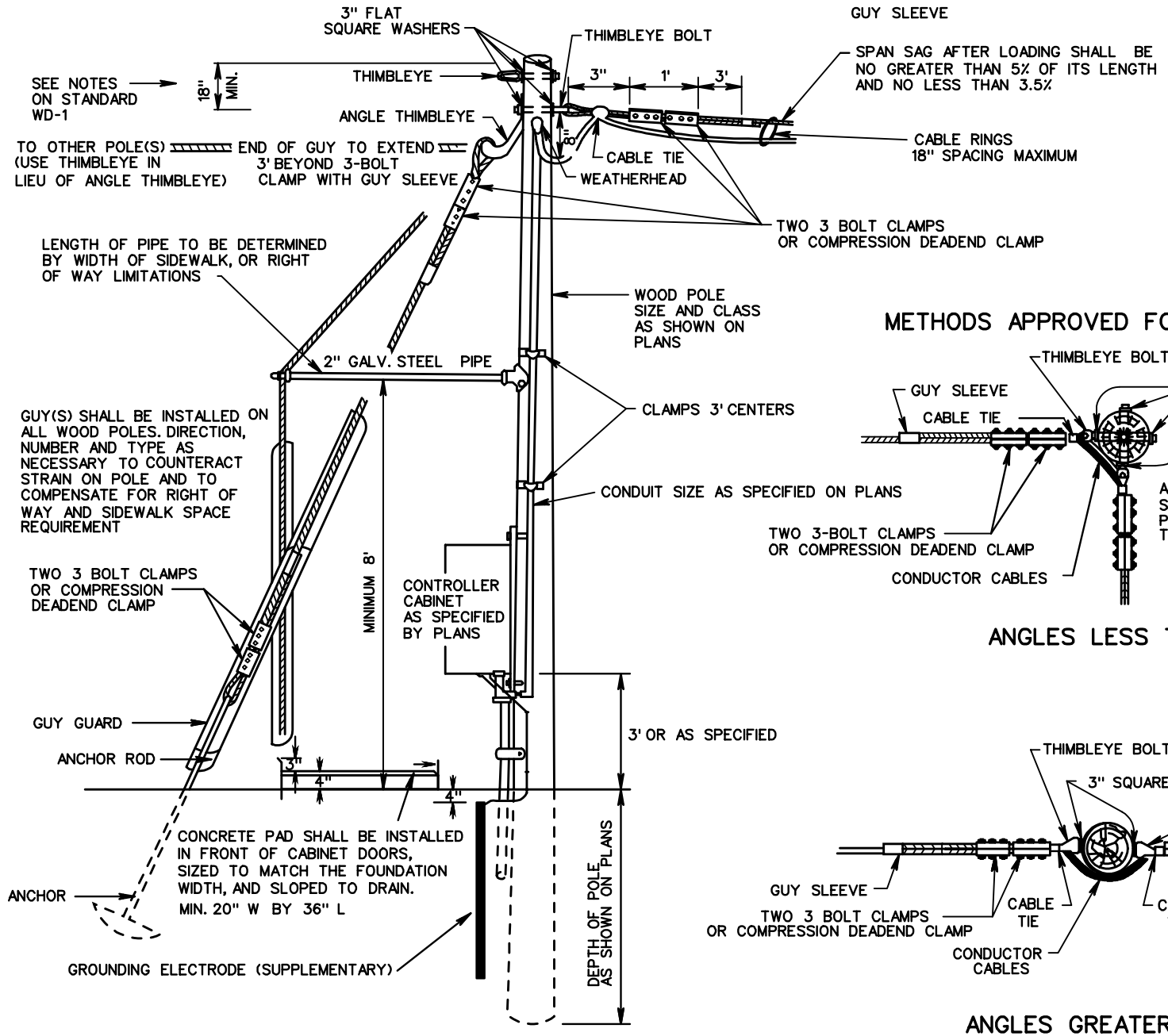

METHODS APPROVED FOR CABLE RUNS

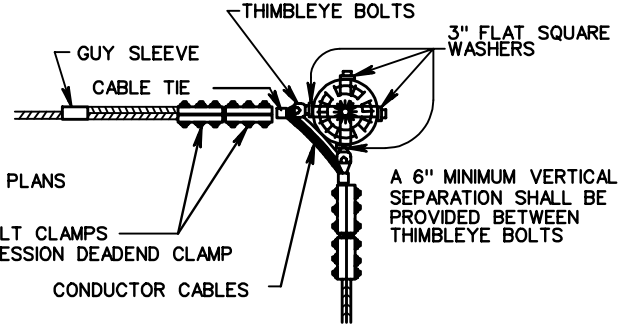

ANGLES LESS THAN 160°

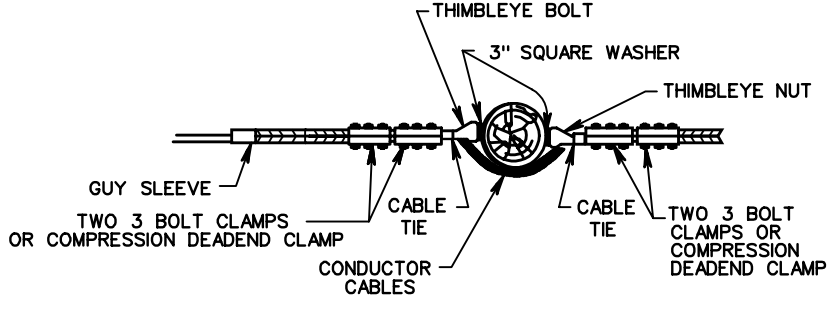

ANGLES GREATER THAN 160°

VDOT ROAD AND BRIDGE STANDARDS	WOOD POLE WIRING AND RIGGING DETAILS	SPECIFICATION REFERENCE
SHEET 1 OF 1	VIRGINIA DEPARTMENT OF TRANSPORTATION	700 703
REVISION DATE		
1306.20		