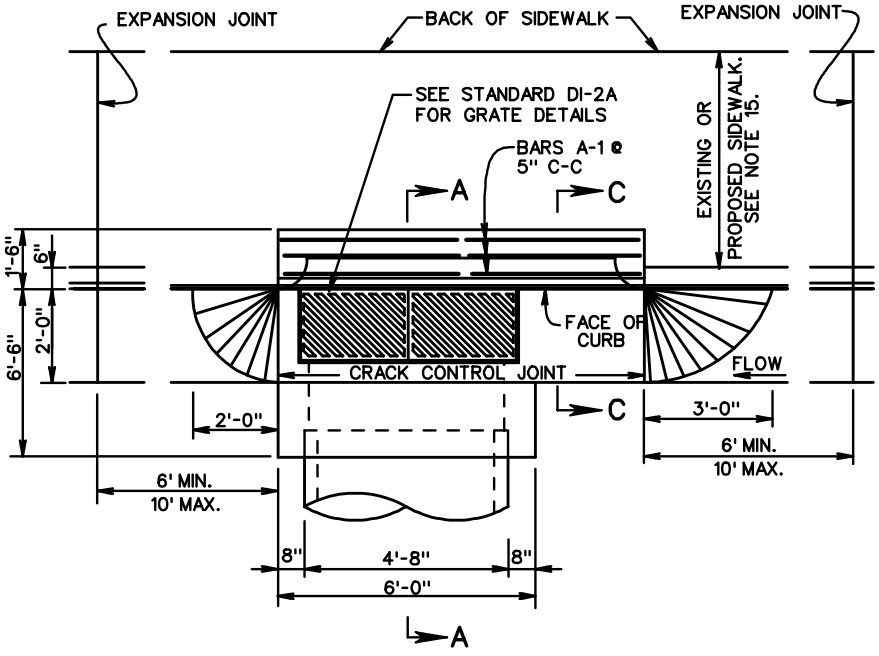

PLAN VIEW

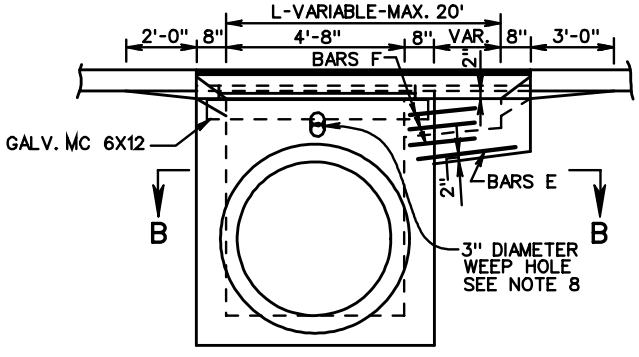

FRONT ELEVATION

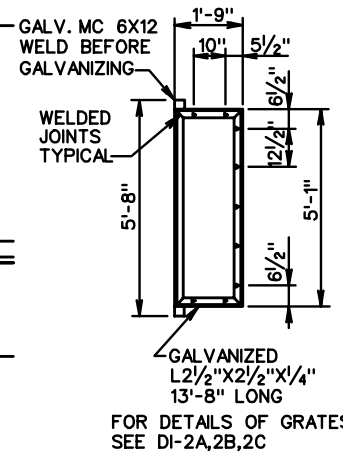

COLLAR

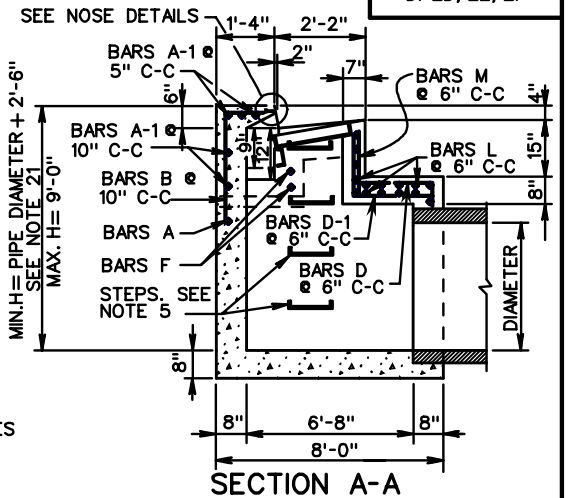

SECTION A-A

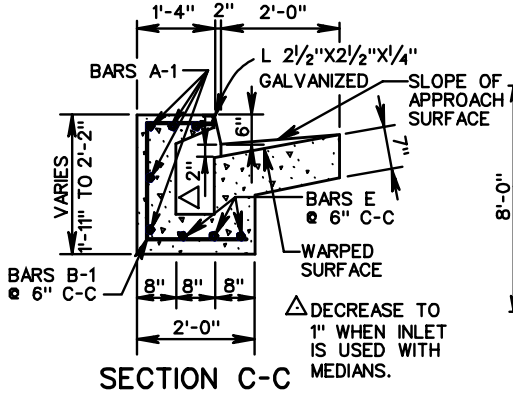

SECTION C-C

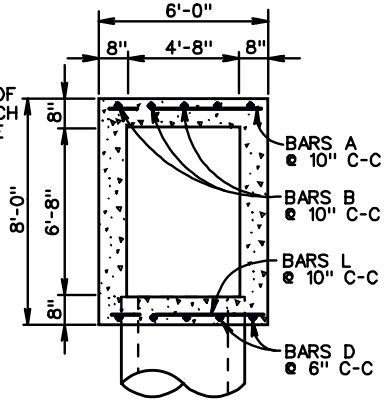

SECTION B-B

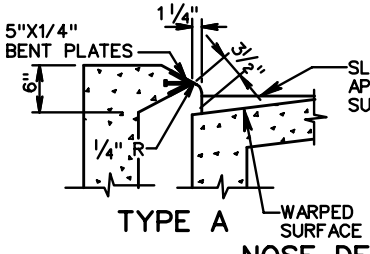

TYPE A

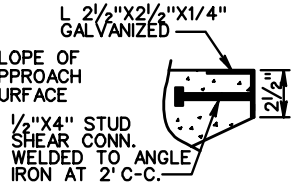

TYPE B

NOSE DETAILS

TYPE A NOSE DETAIL SHALL BE USED WITH CG-7 STANDARD.

TYPE B NOSE DETAIL SHALL BE USED WITH CG-6 STANDARD.

GALVANIZED PLATE FOR TYPE A TO BE BENT ON AN ANGLE OF 68° 30' AND IS TO BE ANCHORED WITH ½"X4" STUD SHEAR CONNECTORS WELDED TO BENT PLATE AT 2' C-C.

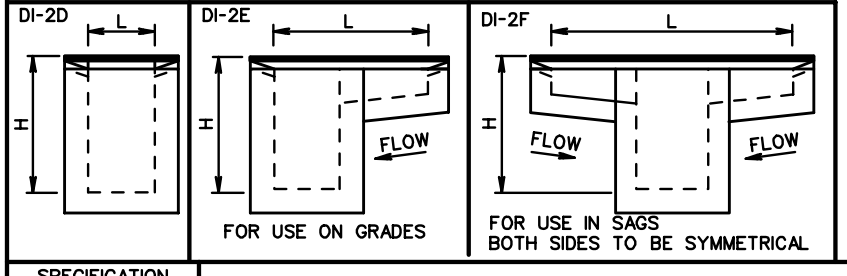

SPECIFICATION REFERENCE
233 302

STANDARD CURB DROP INLET

30" - 48" PIPE: MAXIMUM DEPTH (H) - 9'

VIRGINIA DEPARTMENT OF TRANSPORTATION

VDOT

ROAD AND BRIDGE STANDARDS

REVISION DATE	SHEET 1 OF 2
	104.06