DI-2A, 2B, 2C

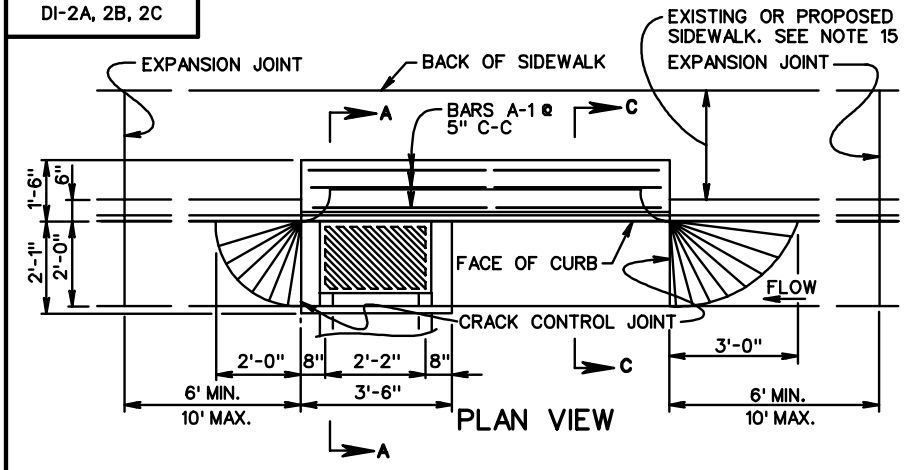

PLAN VIEW

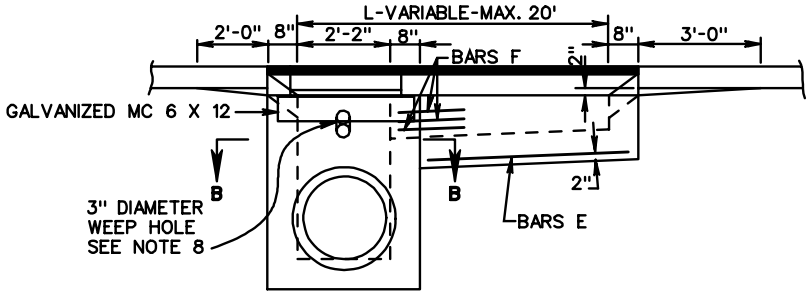

FRONT ELEVATION

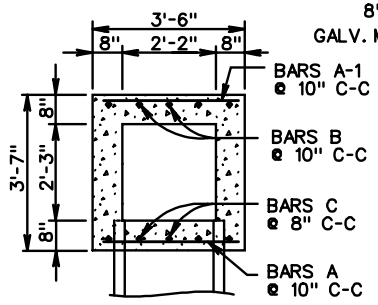

SECTION B-B

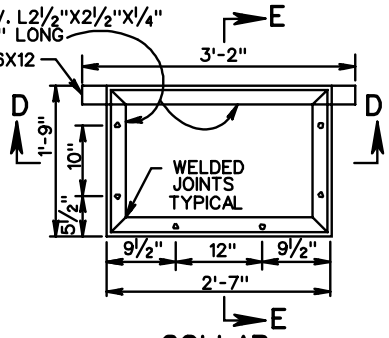

COLLAR

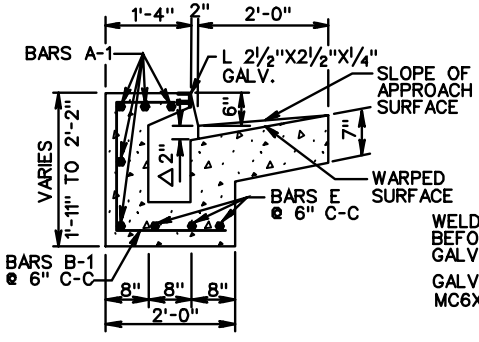

SECTION C-C

△DECREASE TO 1" WHEN INLET IS USED WITH MEDIANS.

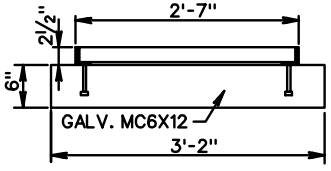

SECTION D-D

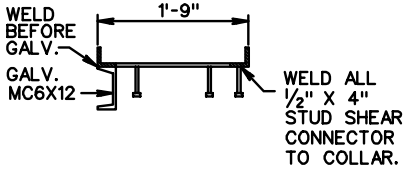

SECTION E-E

DI-2A

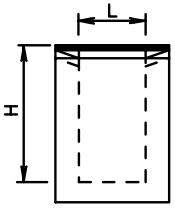

DI-2B

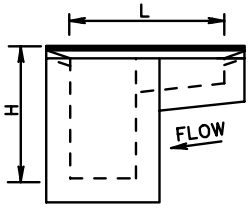

FOR USE ON GRADES

DI-2C

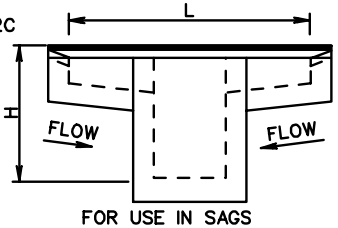

FOR USE IN SAGS
BOTH SIDES TO BE SYMMETRICAL

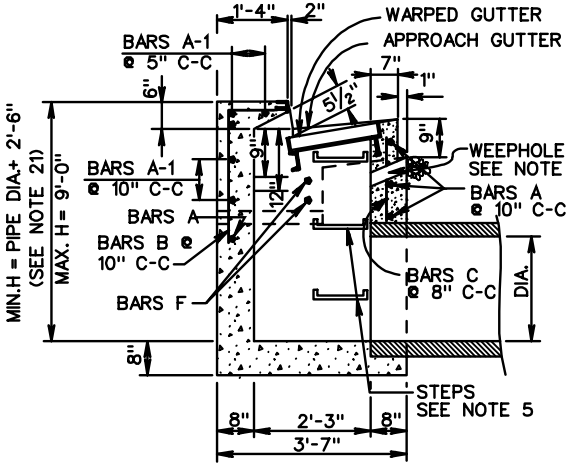

SECTION A-A

FOR STEP DETAILS SEE STD. ST-1.

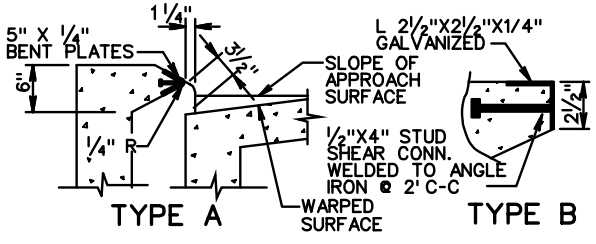

TYPE A

TYPE B

NOSE DETAILS

TYPE A NOSE DETAIL SHALL BE USED WITH CG-7 STANDARD.

TYPE B NOSE DETAIL SHALL BE USED WITH CG-6 STANDARD.

GALVANIZED PLATE FOR TYPE A TO BE BENT ON AN ANGLE OF 68° 30' AND IS TO BE ANCHORED WITH ½"X4" STUD SHEAR CONNECTORS WELDED TO BENT PLATE AT 2' C-C.

VDOT

ROAD AND BRIDGE STANDARDS

SHEET 1 OF 2

REVISION DATE

104.03

STANDARD CURB DROP INLET

12" - 24" PIPE: MAXIMUM DEPTH (H) = 9'

VIRGINIA DEPARTMENT OF TRANSPORTATION

SPECIFICATION REFERENCE

233
302