BCT-DT

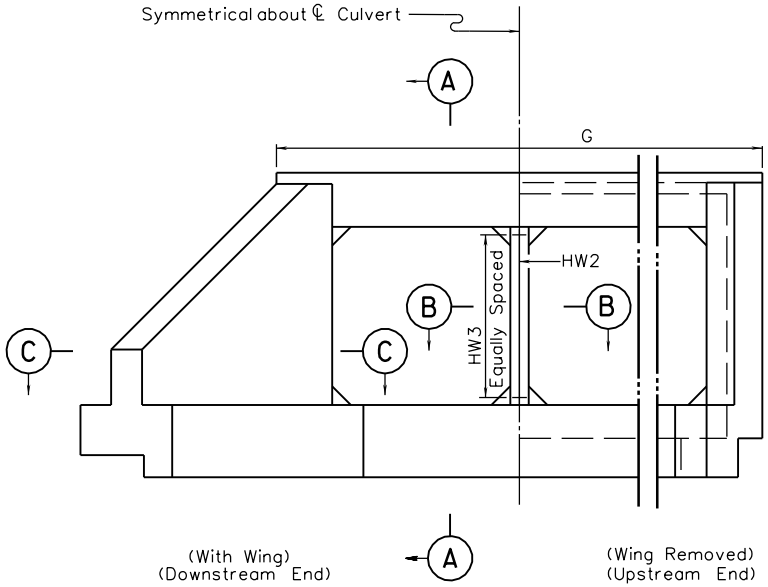

END ELEVATION

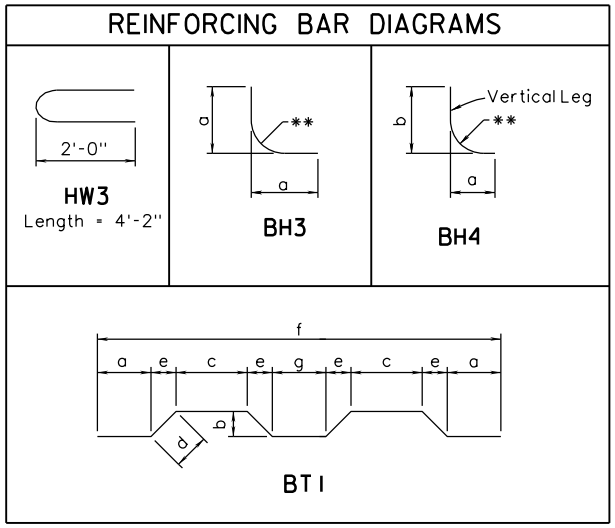

TABLE A	
Bar Size	Pin Dia.
#3	2¼"
#4	3"
#5	3¾"
#6	4½"
#7	5¼"
#8	6"
#9	9"

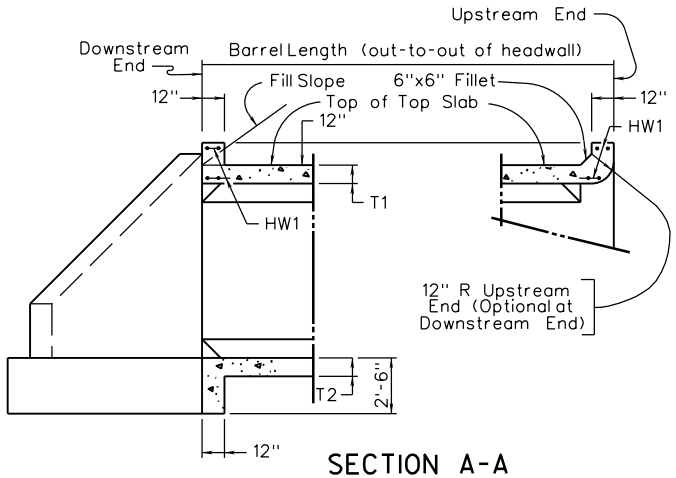

SECTION A-A
(With Wing)

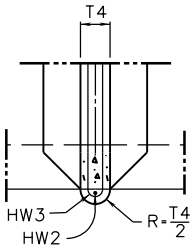

PART SECTION B-B
UPSTREAM END
(Optional at Downstream End)

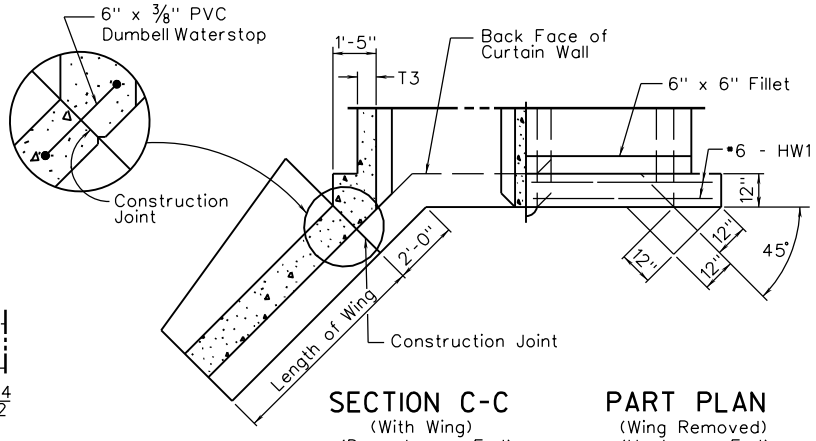

SECTION C-C
(With Wing)
(Downstream End)

PART PLAN
(Wing Removed)
(Upstream End)

VDOT
ROAD AND BRIDGE STANDARDS

SHEET 3 OF 3

1004.03

REVISION DATE
07/11

TRIPLE BOX CULVERTS

STANDARD DETAILS

VIRGINIA DEPARTMENT OF TRANSPORTATION

SPECIFICATION REFERENCE