PR-3

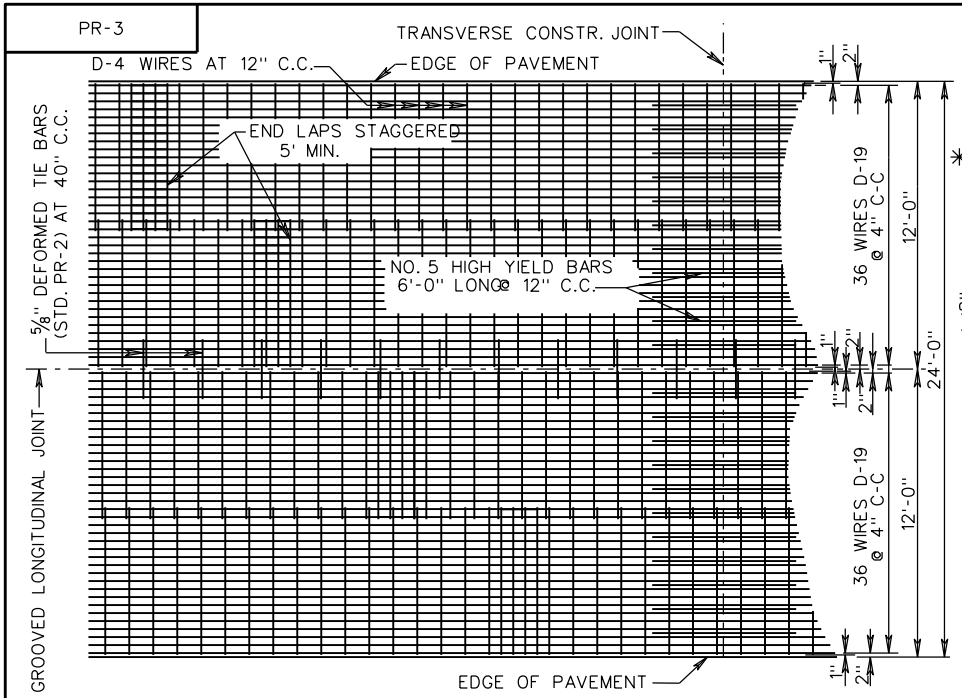

PLAN VIEW

NOTES:
FOR 36' PAVEMENT, USE SINGLE 12' LANES WITH 2 CONSTRUCTION JOINTS, OR 12' AND 24' LANES WITH ONE GROOVE AND ONE CONSTRUCTION JOINT.
TRANSVERSE WIRES DO NOT EXTEND THROUGH LONGITUDINAL JOINTS.

TIE BARS AND DOWEL BARS ARE TO BE AS NEAR MIDPOINT OF PAVEMENT DEPTH AS FEASIBLE.

✳ THE DOUBLE LAP REQUIREMENT (36") AND OR EXTRA BAR METHOD APPLIES ONLY TO LAPS FALLING WITHIN AAN AREA 10' BEYOND THE CONSTRUCTION JOINT.

#5 X 2'-6" DEFORMED TIE BARS AT 30" O.C. MAY BE USED IN LIEU OF HOOK BOLTS WHERE SHOWN HEREON.

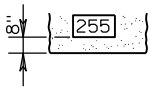

SMOOTH SURFACE TO BE STEEL TROWELED 8" IN FROM THE EDGE OF PAVEMENT EVERY 500 FEET, AND STATION NUMBER STAMPED INTO IT. THE DATE IS TO BE SHOWN IN A SIMILAR MANNER AT THE BRGINNING OF EACH DAYS POUR.

BOTH OUTSIDE EDGES OF DIVIDED HIGHWAY TO BE STAMPED. ONE EDGE OF UNDIVIDED HIGHWAYS WHERE FEASIBLE. (TRAVEL LANE)

SHEETS TO BE SECURELY FASTENED TO PREVENT SEPARATION DURING CONCRETE PLACEMENT.

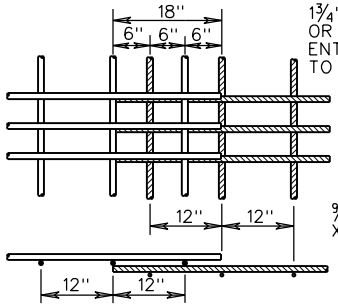

END LAP DETAIL

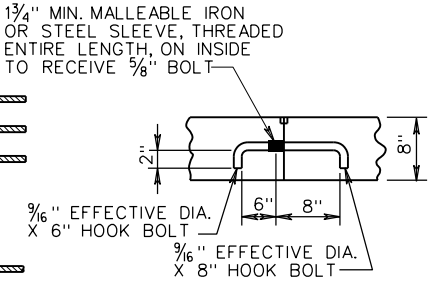

HOOK BOLT DETAIL

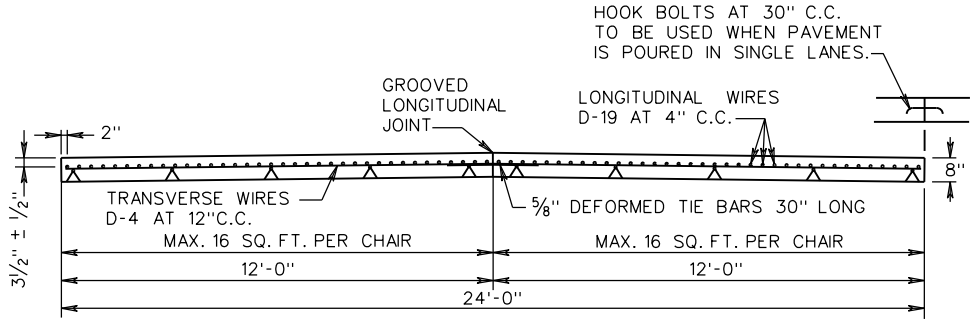

TRANSVERSE SECTION

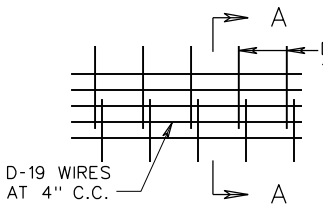

EDGE LAP DETAIL

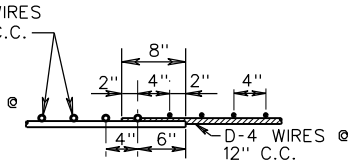

SECTION A-A

SHEETS TO BE SECURELY FASTENED TO PREVENT SEPARATION DURING CONCRETE PLACEMENT,

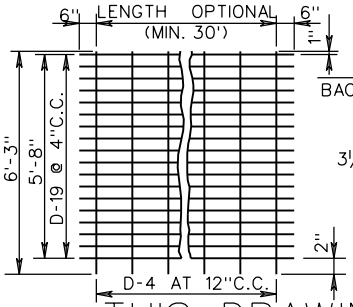

TYPICAL WIRE FABRIC SHEET

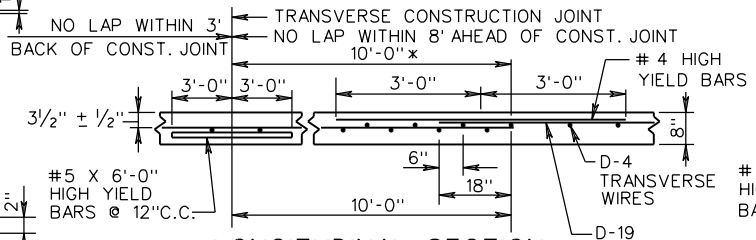

LONGITUDINAL SECTION
EXTRA BAR METHOD

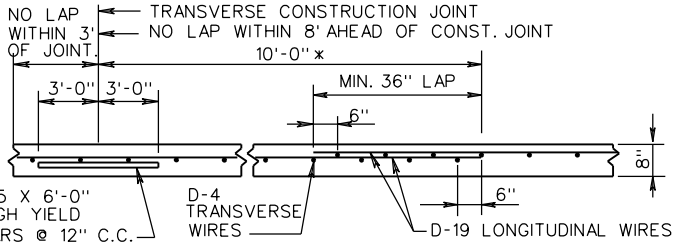

LONGITUDINAL SECTION
DOUBLE LAP METHOD

THIS DRAWING WAS VOID WITH THE JULY 2011 ROAD STANDARDS REVISION

VDOT ROAD AND BRIDGE STANDARDS	8" THICK CONTINUOUSLY REINFORCED CONC. PAVE. (WIRE MESH REINFORCEMENT)		SPECIFICATION REFERENCE
SHEET 1 OF 4	REVISION DATE		316
301.06			

VIRGINIA DEPARTMENT OF TRANSPORTATION

VOID