#DGN#
#DGNLEV

#REF001
#LEV001

#REF002
#LEV002

#REF003
#LEV003

#REF004
#LEV004

#REF005
#LEV005

#REF006
#LEV006

SURVEYED BY
SUPERVISED BY
DESIGNED BY

DESIGN FEATURES RELATING TO CONSTRUCTION OR TO REGULATION AND CONTROL OF TRAFFIC MAY BE SUBJECT TO CHANGE AS DEEMED NECESSARY BY THE DEPARTMENT

REVISED	SCALE	PERSONAL USE PROJECT	STATE		DRAWING
	N.T.S.		DISTRICT	PROJECT	

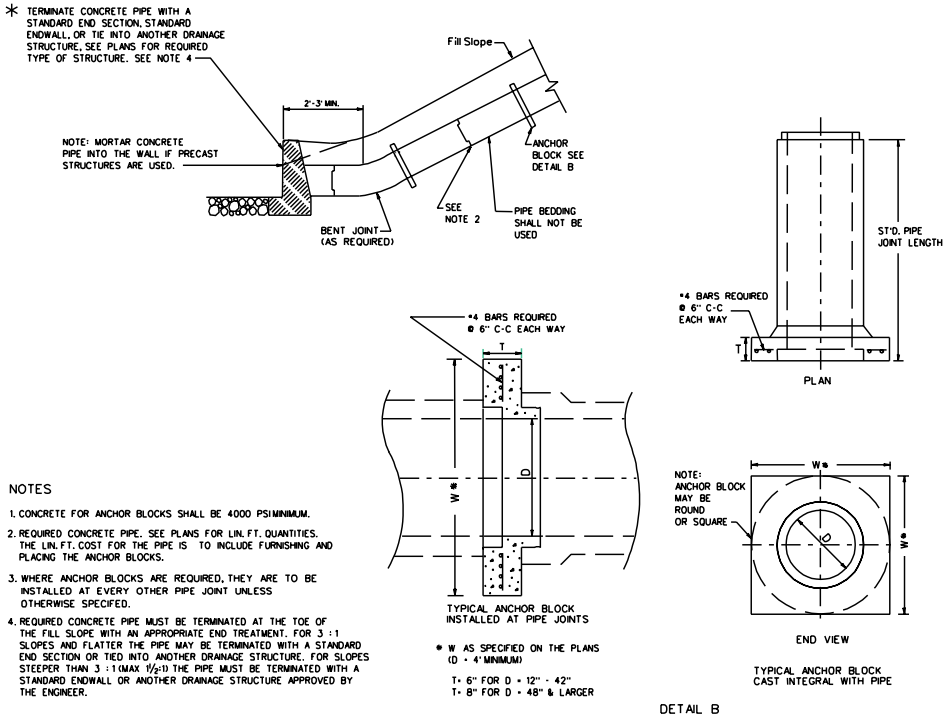

NOTES

1. CONCRETE FOR ANCHOR BLOCKS SHALL BE 4000 PSI MINIMUM.
2. REQUIRED CONCRETE PIPE. SEE PLANS FOR LIN. FT. QUANTITIES. THE LIN. FT. COST FOR THE PIPE IS TO INCLUDE FURNISHING AND PLACING THE ANCHOR BLOCKS.
3. WHERE ANCHOR BLOCKS ARE REQUIRED, THEY ARE TO BE INSTALLED AT EVERY OTHER PIPE JOINT UNLESS OTHERWISE SPECIFED.
4. REQUIRED CONCRETE PIPE MUST BE TERMINATED AT THE TOE OF THE FILL SLOPE WITH AN APPROPRIATE END TREATMENT. FOR 3 : 1 SLOPES AND FLATTER THE PIPE MAY BE TERMINATED WITH A STANDARD END SECTION OR TIED INTO ANOTHER DRAINAGE STRUCTURE. FOR SLOPES STEEPER THAN 3 : 1 (MAX 1½:1) THE PIPE MUST BE TERMINATED WITH A STANDARD ENDWALL OR ANOTHER DRAINAGE STRUCTURE APPROVED BY THE ENGINEER.

CONCRETE PIPE

SPECIFICATION REFERENCE	TYPICAL METHOD OF INSTALLATION FOR PIPE ON FILL SLOPE VIRGINIA DEPARTMENT OF TRANSPORTATION

REVISE 07-01
SPECIAL DESIGN SECTION
DRAWING NO. A 73

PLAN NO.	PROJECT	PHASE	SHEET NO.

#TIMESTAMP#