$TIME$STAMP$

DGN $DGNLEV

SURVEYED BY
SUPERVISED BY
DESIGNED BY

IC-2

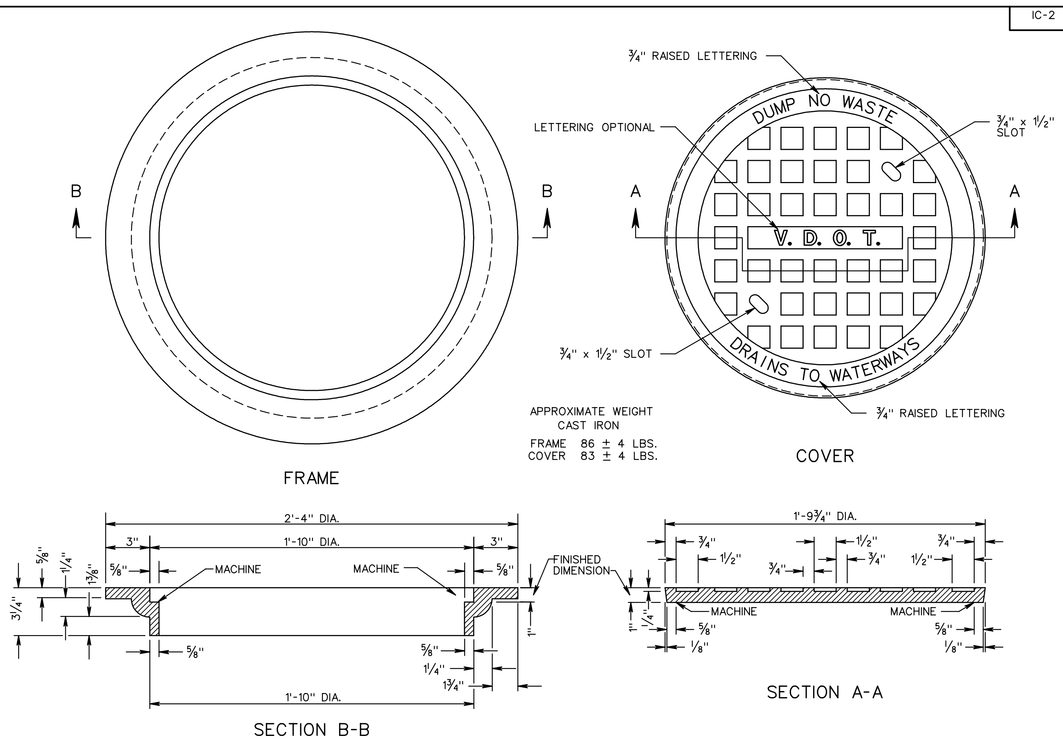

NOTES

1. THE LETTERS V.D.O.T. ARE OPTIONAL, IF USED THE LETTERS ARE TO BE CAST IN THE DEPRESSION IN TOP OF THE COVER 1" WIDE AND RAISED ¼" HIGH AS SHOWN.
2. THE DUMP NO WASTE DRAINS TO WATERWAYS LETTERING IS REQUIRED ON ALL IC-2 COVERS. LOCATION OF LETTERING ON IC-2 COVER MAY VARY BY MANUFACTURER.

SHEET 1 OF 3

SPECIFICATION REFERENCE	STANDARD INLET AND FRAME COVER	
224 302	VIRGINIA DEPARTMENT OF TRANSPORTATION	REV 8/07 105.01

IC-2

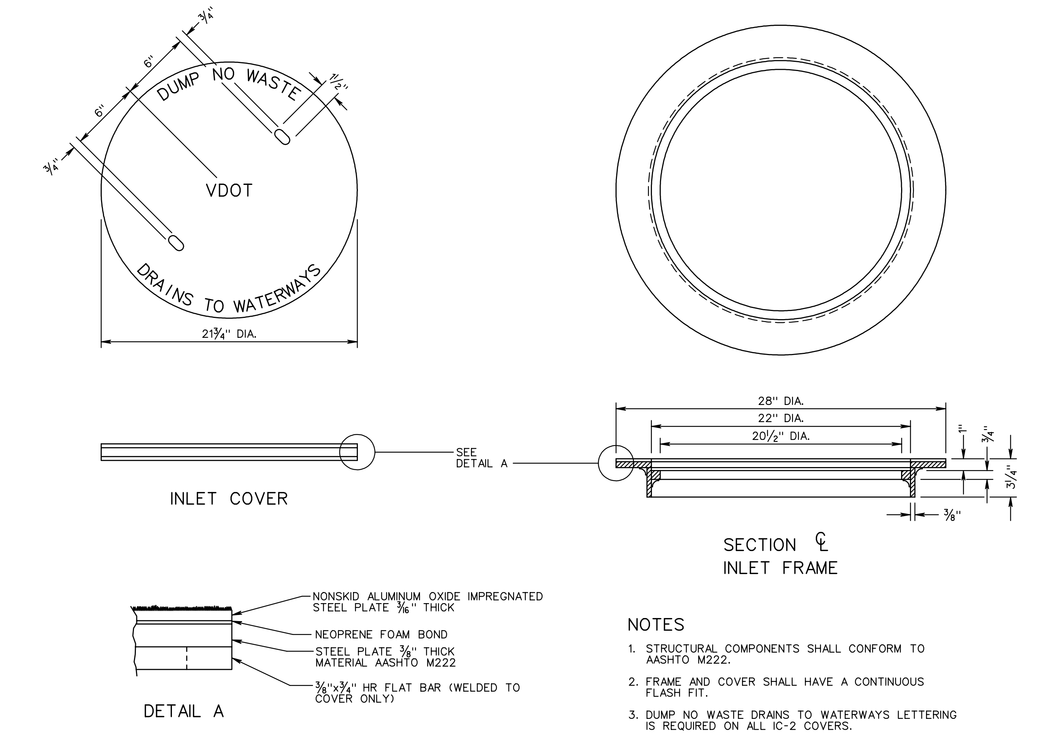

NOTES

1. STRUCTURAL COMPONENTS SHALL CONFORM TO AASHTO M222.
2. FRAME AND COVER SHALL HAVE A CONTINUOUS FLASH FIT.
3. DUMP NO WASTE DRAINS TO WATERWAYS LETTERING IS REQUIRED ON ALL IC-2 COVERS.

SHEET 2 OF 3

STANDARD INLET AND FRAME COVER	SPECIFICATION REFERENCE
REV 8/07 105.02 — VIRGINIA DEPARTMENT OF TRANSPORTATION	302

DESIGN FEATURES RELATING TO CONSTRUCTION OR TO REGULATION AND CONTROL OF TRAFFIC MAY BE SUBJECT TO CHANGE AS DEEMED NECESSARY BY THE DEPARTMENT

$REF001 $LEV001
$REF002 $LEV002
$REF003 $LEV003
$REF004 $LEV004
$REF005 $LEV005
$REF006 $LEV006

REVISED	STATE	FEDERAL AID PROJECT	ROUTE	STATE PROJECT	SHEET NO.
	VA.				

PLAN NO. | PROJECT | FILE NO. | SHEET NO.

NEW 8/07
SPECIAL DESIGN SECTION
DRAWING NO. A-192_1