GR-INS

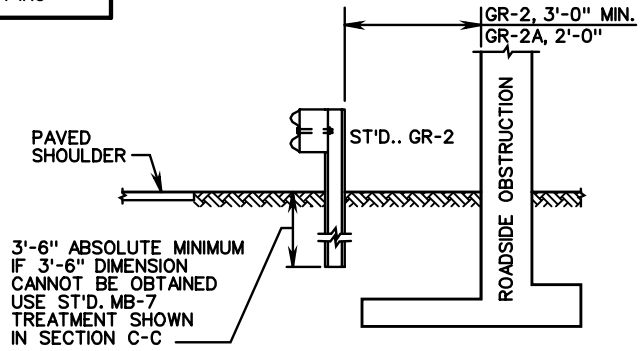

SECTION A-A

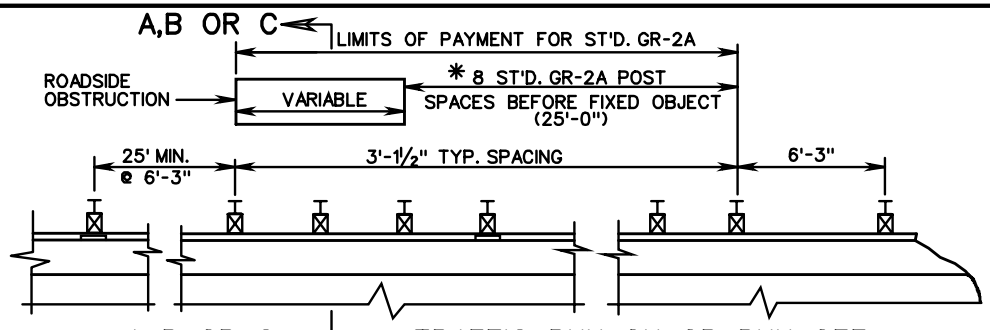

TRAFFIC RUN ON OR RUN OFF

*FOR TWO WAY TRAFFIC, USE 8 POST SPACING DESIGN FROM EACH END OF FIXED OBJECT.

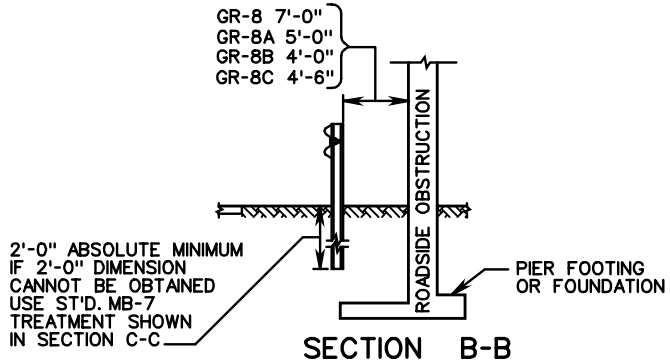

SECTION B-B

FOR USE WHERE DISTANCE FROM BACK OF GR-2A POST TO FIXED OBJECT IS LESS THAN 2'-0".

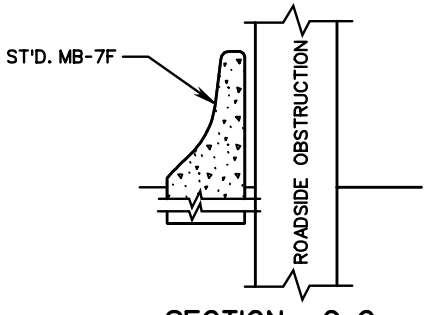

SECTION C-C

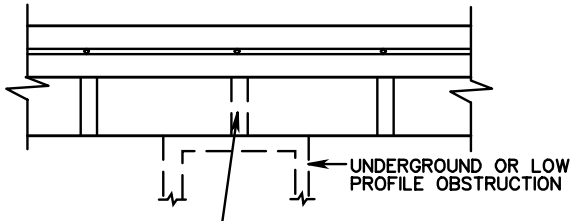

NOTE:
IF GROUND LEVEL OR UNDERGROUND FIXED OBJECT NECESSITATES THE ELIMINATION OF ONE OR MORE POSTS, A GR-10 OR A SPECIAL DESIGN WILL BE REQUIRED

DETAIL OF SPECIAL DESIGN SITUATION

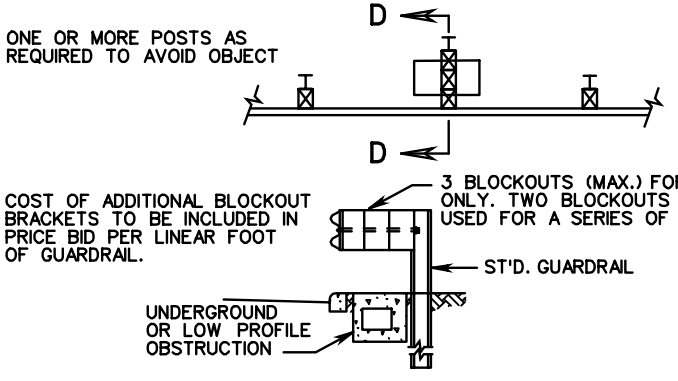

SECTION D-D
DETAIL OF MULTIPLE BLOCK-OUT TO AVOID UNDERGROUND OR LOW PROFILE OBSTRUCTION

VDOT
ROAD AND BRIDGE STANDARDS

SHEET 3 OF 8 | REVISION DATE
501.36

W BEAM GUARDRAIL INSTALLATION CRITERIA

VIRGINIA DEPARTMENT OF TRANSPORTATION

SPECIFICATION REFERENCE
221
505