WSP-1

INSTALLATION DETAILS

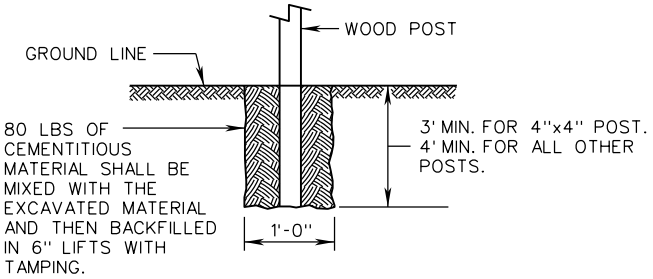

SET IN EARTH

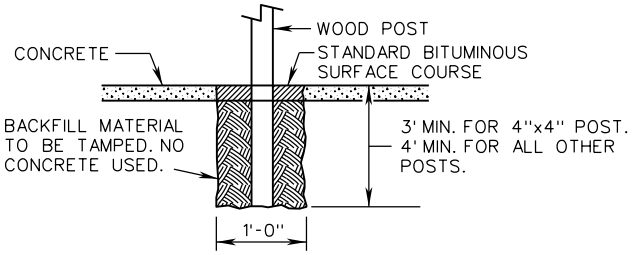

SET IN CONCRETE

METHOD OF POST DRILLING

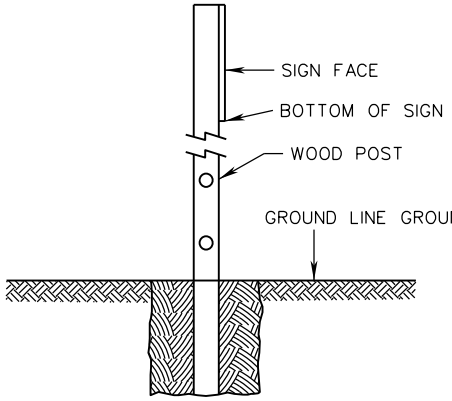

SIDE VIEW

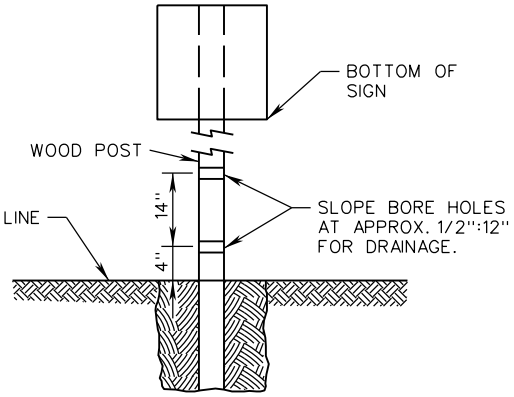

FRONT VIEW

NOTES:

1. 6" X 6" WOOD POST REQUIRES TWO 2" BORE HOLES.
2. 6" X 8" WOOD POST REQUIRES TWO 3" BORE HOLES.
3. POSTS LESS THAN 6" X 6" DO NOT REQUIRE BORE HOLES.

BRACING AND POST TOLERANCE DETAIL

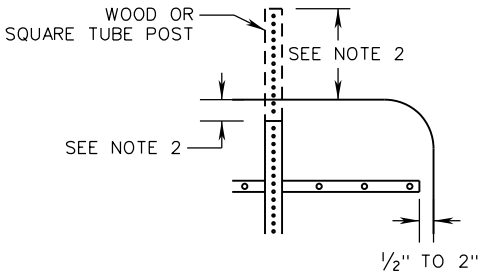

NOTES:

1. SIGN WIDTHS GREATER THAN 48" SHALL REQUIRE SIGN BRACING CONFORMING TO STANDARD STP-1.
2. THE TOP OF POST SHALL BE NO MORE THAN 2" BELOW AND NO MORE THAN 2 FEET ABOVE THE TOP OF THE SIGN.

A COPY OF THE ORIGINAL SEALED AND SIGNED DRAWING IS ON FILE IN THE CENTRAL OFFICE.

SPECIFICATION REFERENCE	TEMPORARY SIGNS (FOR CONSTRUCTION, MAINTENANCE, PERMIT AND UTILITY ACTIVITIES) WOOD OR SQUARE TUBE STEEL POST SIGN STRUCTURES VIRGINIA DEPARTMENT OF TRANSPORTATION	VDOT ROAD AND BRIDGE STANDARDS	
512 700		REVISION DATE 08/17	SHEET 2 OF 7 1320.11