REVISED 7/01 REVISED 7/04 REVISED 9/06

MS-1A

(1) Thoroughly compacted area to consist of the following:

In Fills-Regular fill material.
In Cuts-Undisturbed earth and regular fill material as required.

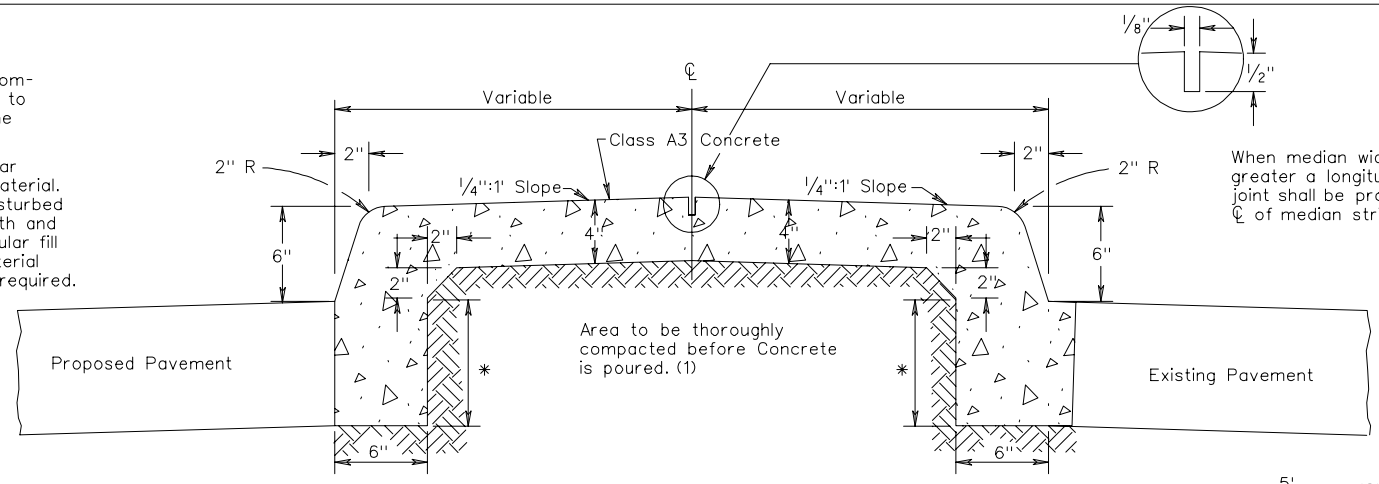

When median width is 3 feet or greater a longitudinal contraction joint shall be provided along ℄ of median strip.

SUGGESTED CONSTRUCTION METHOD IF TOP SLAB IS POURED SEPARATELY

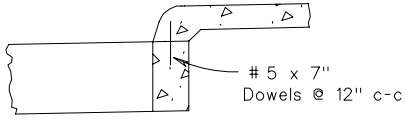

ALTERNATE CONSTRUCTION METHOD IF TOP SLAB IS POURED SEPARATELY

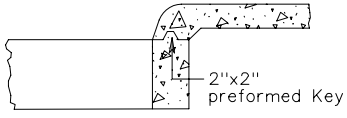

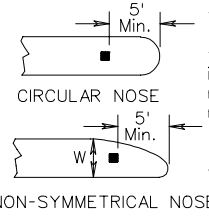

12" square hole for sign post to be formed into introduced median noses a minimum of 5' from the nose.

W = 4' desirable
3' min.

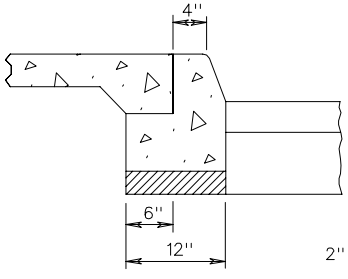

Where design speed is greater than 40 MPH on Rural Highways and 45 MPH in developed Urban and Suburban areas, median curb is to be in accordance with Standard CG-3.

* The depth of curb may be reduced as much as 3" (9" depth) or increased as much as 3" (15" depth) in order that the bottom of curb will coincide with the top of a course of the pavement substructure. Otherwise the depth is to be 12" as shown. No adjustment in the price bid is to be made for a decrease or an increase in depth.

Additional holes of adequate size to be provided for sign posts, delineator posts, etc. as shown on the plans or directed by the Engineer.

ALTERNATE WITH EXTRUDED CURB

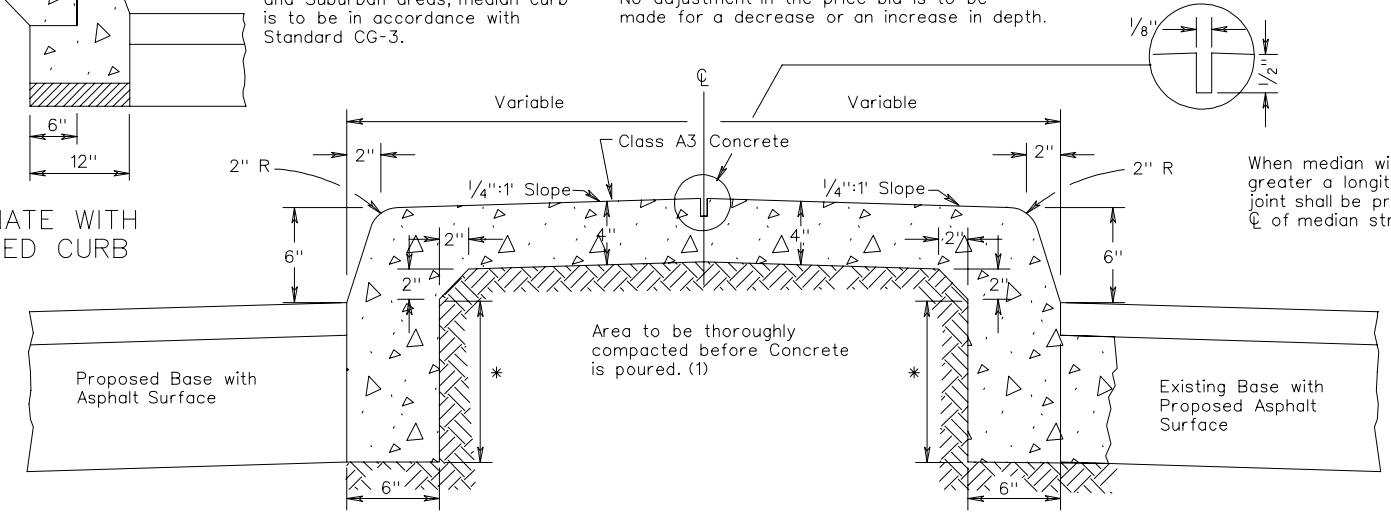

When median width is 3 feet or greater a longitudinal contraction joint shall be provided along ℄ of median strip.

SPECIFICATION REFERENCE	STANDARD SOLID CONCRETE RAISED MEDIAN STRIP
502	VIRGINIA DEPARTMENT OF TRANSPORTATION

202.03