$TIME$STAMP$

PLAN NOTE BOOK NO.		BY	DATE
	SURVEYED		
	PLOTTED		
	ALIGNMENT CHECKED		
	RIGHT OF WAY CHECKED		

SUPERVISED BY
DESIGNED BY
CADD OPERATOR $$DESIGN$FILE$SPECIFICATION$$
REVISED BY

SE-1

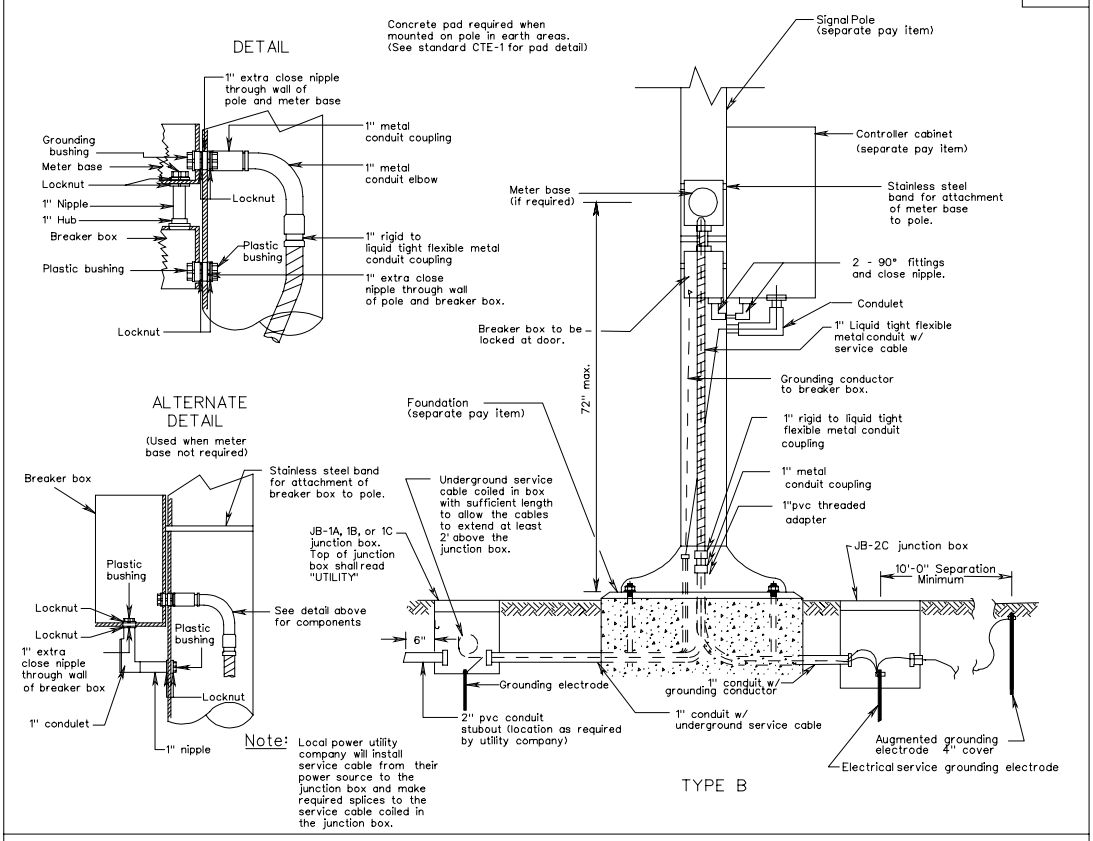

Note: Local power utility company will install service cable from their power source to the junction box and make required splices to the service cable coiled in the junction box.

ELECTRICAL SERVICE DETAILS
SIGNAL INSTALLATION

REV. 2/06

VIRGINIA DEPARTMENT OF TRANSPORTATION

1301.31

SE-1

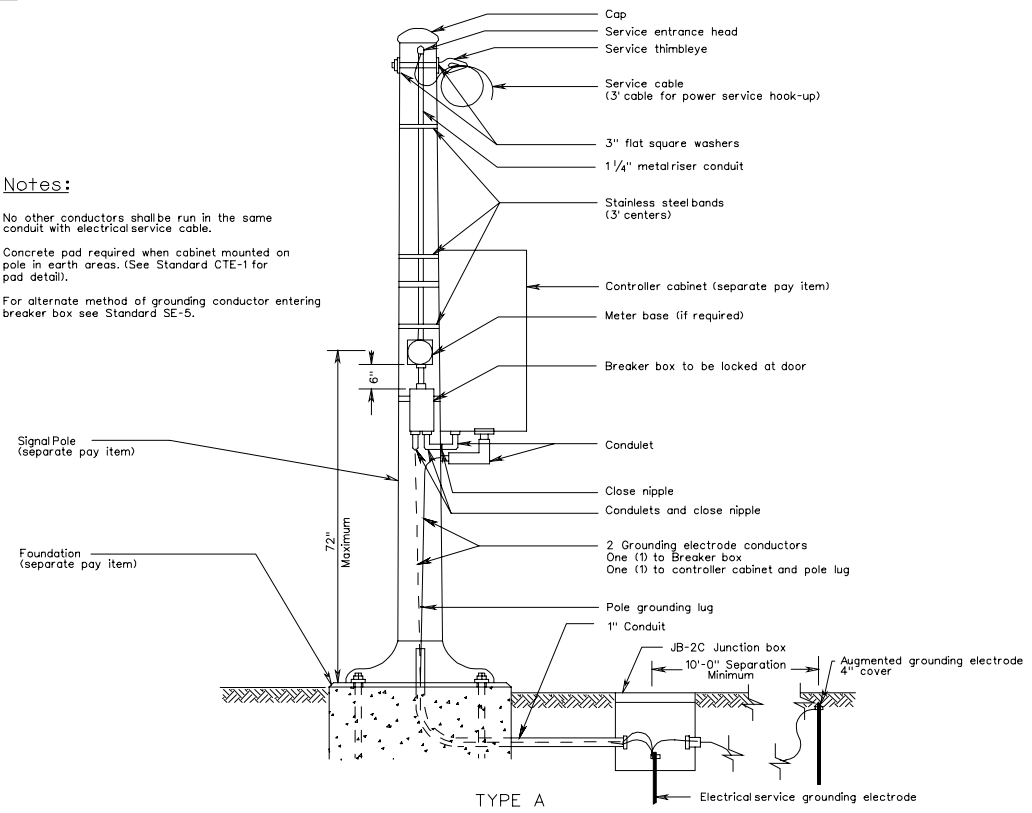

Notes:

No other conductors shall be run in the same conduit with electrical service cable.

Concrete pad required when cabinet mounted on pole in earth areas. (See Standard CTE-1 for pad detail).

For alternate method of grounding conductor entering breaker box see Standard SE-5.

ELECTRICAL SERVICE DETAILS
SIGNAL INSTALLATIONS

REV 2/06

1301.30

VIRGINIA DEPARTMENT OF TRANSPORTATION

DESIGN FEATURES RELATING TO CONSTRUCTION OR TO REGULATION AND CONTROL OF TRAFFIC MAY BE SUBJECT TO CHANGE AS DEEMED NECESSARY BY THE DEPARTMENT

REVISED	FHWA REGION	STATE	FEDERAL AID PROJECT	ROUTE	STATE PROJECT	SHEET NO.
	3	VA.				

NEW 2/06
SPECIAL DESIGN SECTION
DRAWING NO. A - 172

PLAN NO. A | PROJECT | FILE NO. | SHEET NO.