REVISED ON 1-04

FE-6

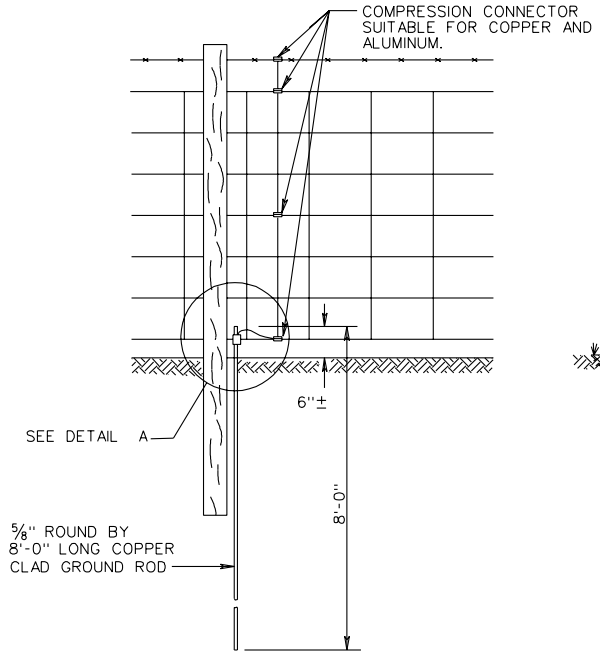

ELEVATION

FOR CHAIN LINK FENCE GROUNDING, SEE DETAIL BELOW.

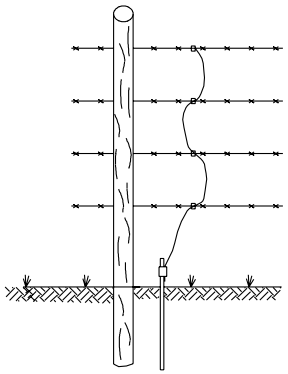

ELEVATION

NOTES:
APPROXIMATE MATERIALS PER INSTALLATION:
1-5/8" ROUND BY 8'-0" LONG COPPER CLAD GROUND ROD.
1 GROUND ROD CLAMP
1-7'-0" #6 AWG SOLID COPPER WIRE
3* COMPRESSION CONNECTORS (SUITABLE FOR COPPER & ALUMINUM)

* MINIMUM 3 CONNECTORS FOR 47" FENCE FABRIC TO BE SECURED TO TOP, BOTTOM AND ONE INTERMEDIATE HORIZONTAL WIRE STRAND. ONE ADDITIONAL CONNECTOR TO BE FURNISHED FOR EACH STRAND OF BARBED WIRE.

ON BARBED WIRE INSTALLATIONS, ONE CONNECTOR IS TO BE FURNISHED FOR EACH STRAND.

GROUND WIRE IS TO BE IN CONTACT WITH HORIZONTAL WIRE OF FENCE BY COMPRESSION CONNECTORS AS SHOWN.

GROUND RODS TO BE LOCATED ON POST SIDE OF FENCE AND AS CLOSE AS POSSIBLE TO POST AND FENCE.

UNLESS CALLED FOR ON THE PLANS OR DIRECTED BY THE ENGINEER; FENCE GROUNDING WILL BE REQUIRED ONLY AT THE FOLLOWING LOCATIONS:

METAL FENCES, INCLUDING PLASTIC COATED FENCE FABRIC, SHALL HAVE GROUNDS INSTALLED AT POINTS 50' BEYOND THE OVERHEAD POINTS OF OUTSIDE CONDUCTORS OF 500 KV AND ABOVE HIGH VOLTAGE LINES PASSING ABOVE THE FENCE LINE. IF THE CONDUCTORS OF THE HIGH VOLTAGE LINE ARE PARALLEL TO AND WITHIN 40' OF THE FENCE LINE AS MEASURED HORIZONTALLY, ADDITIONAL GROUNDS SHALL BE INSTALLED AT 50' MAXIMUM INTERVALS ALONG THE PARALLEL SECTION OF FENCE.

COST FOR FURNISHING AND PLACING ALL GROUNDING MATERIALS IS TO BE INCLUDED IN PRICE BID PER LINEAR METER OF FENCE.

DETAILS SHOWN HEREON ARE TO APPLY TO ALL FENCE TYPES. LAWN FENCES WILL BE GROUNDED ONLY WHEN RECOMMENDED BY THE ENGINEER.

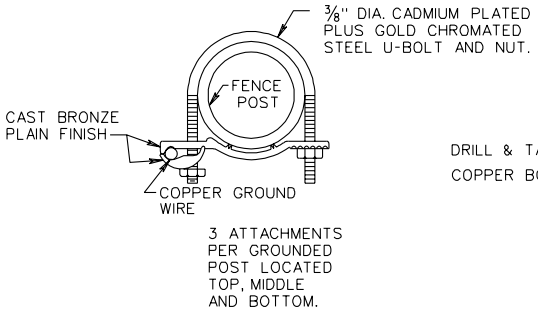

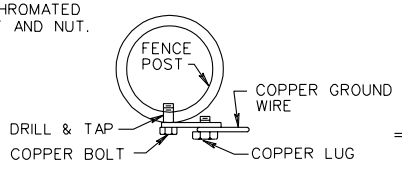

ALTERNATE

DETAIL FOR GROUNDING STEEL POST OF CHAIN LINK FENCE

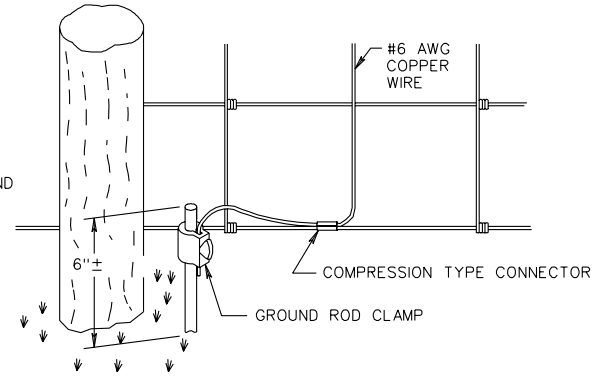

DETAIL A

SPECIFICATION REFERENCE
507 236

STANDARD METHOD OF FENCE GROUNDING

VIRGINIA DEPARTMENT OF TRANSPORTATION

502.07