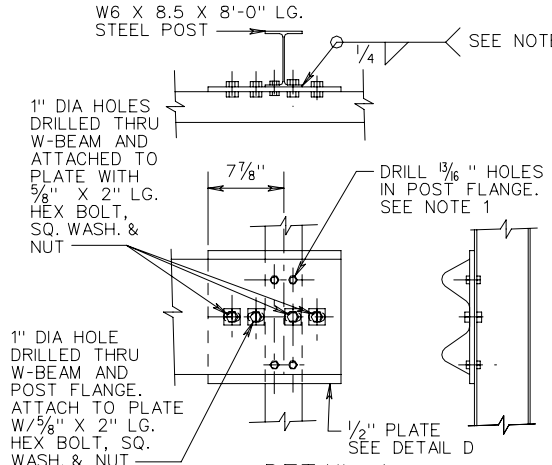

DETAIL A
END ANCHORAGE

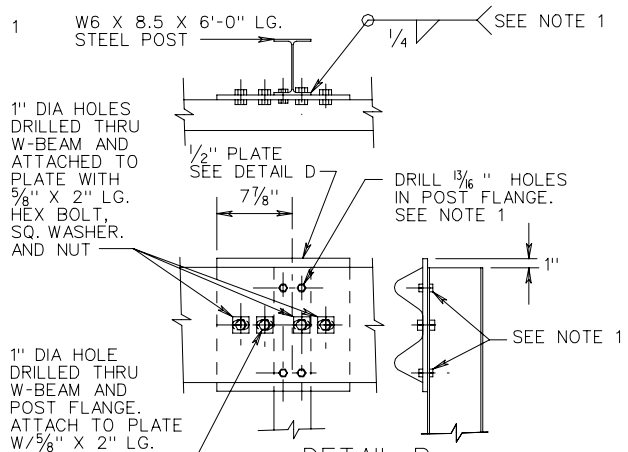

DETAIL B
END ANCHORAGE (POST)

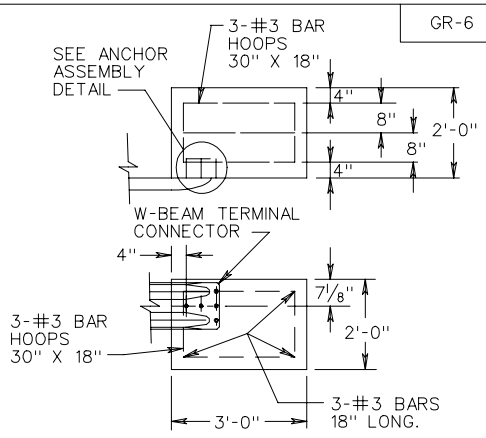

DETAIL C
END ANCHORAGE (CONCRETE)

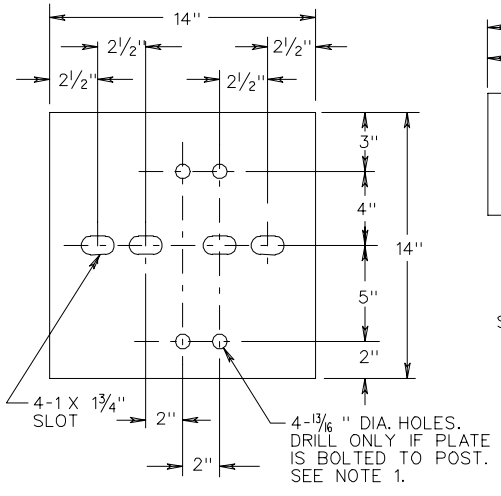

DETAIL D
1/2" THICK STEEL PLATE

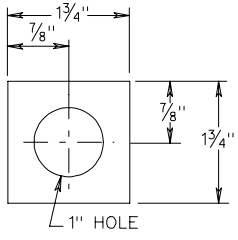

DETAIL E
3/16" THICK SQUARE WASHER

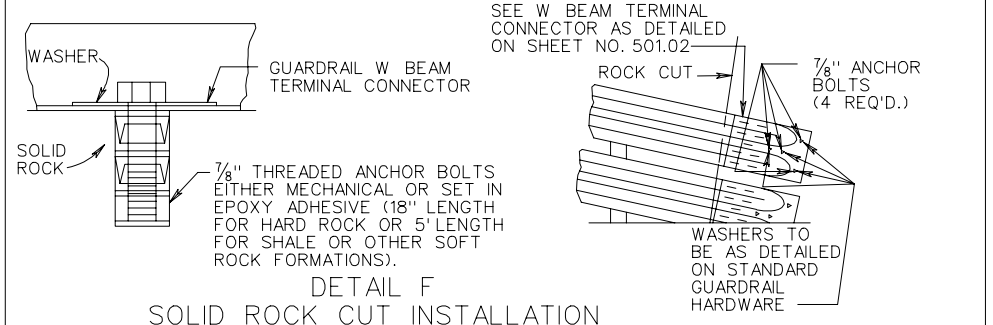

DETAIL F
SOLID ROCK CUT INSTALLATION

NOTE:

1. 1/2" STEEL PLATE MAY BE WELDED OR BOLTED TO POST. IF PLATE IS BOLTED TO POST USE 4 - 5/8" X 1 1/2" LG. HEX HEAD BOLTS W/ HEX NUTS. IF PLATE IS WELDED TO POST DO NOT DRILL 13/16" HOLES IN PLATE OR IN POST FLANGES.
2. CONCRETE END ANCHORAGE MAY BE USED IN PLACE OF STEEL POST AT 8'-0" OFFSET.

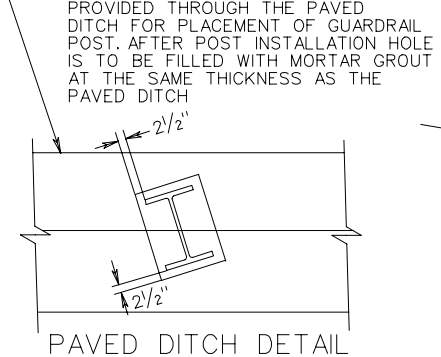

PAVED DITCH DETAIL

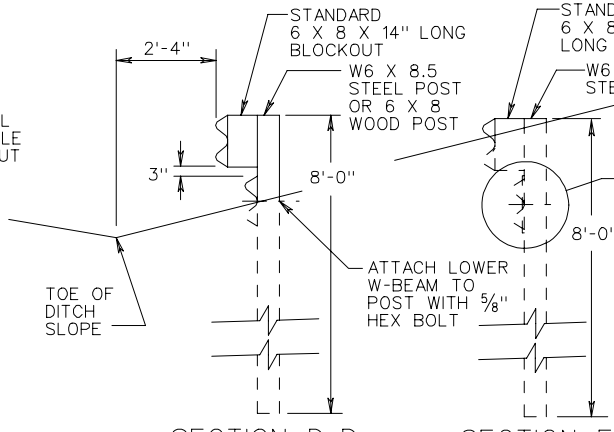

SECTION D-D

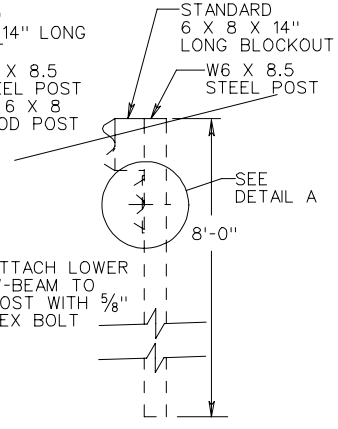

SECTION E-E

SPECIFICATION REFERENCE
505 221

TERMINAL TREATMENT FOR W BEAM GUARDRAIL

VIRGINIA DEPARTMENT OF TRANSPORTATION

REV. 7/04