GR-6

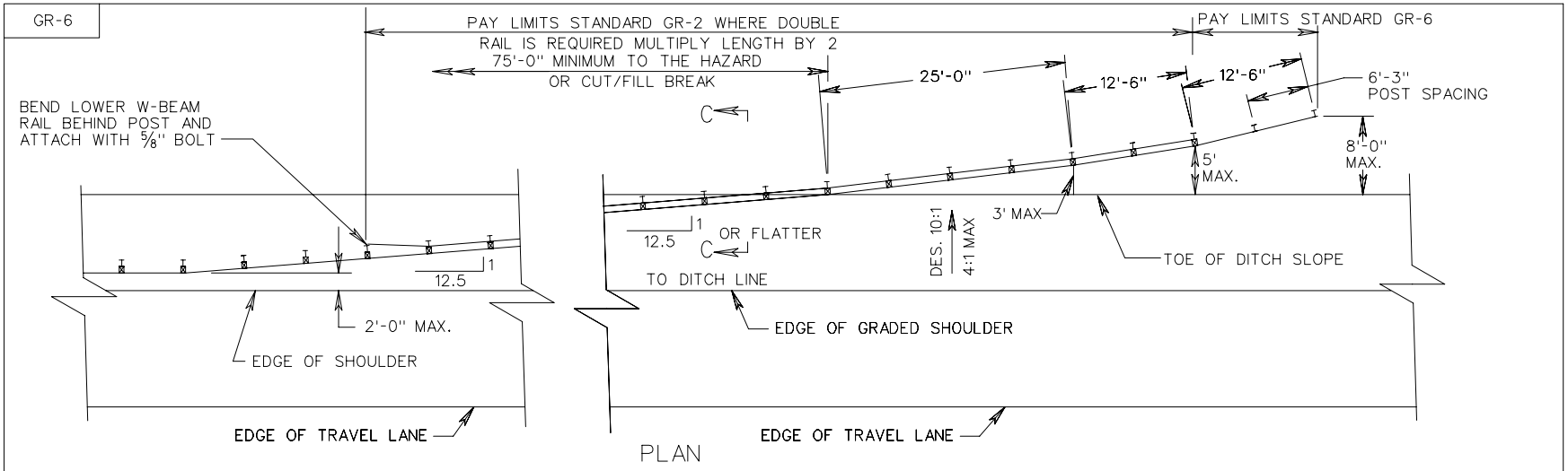

PLAN

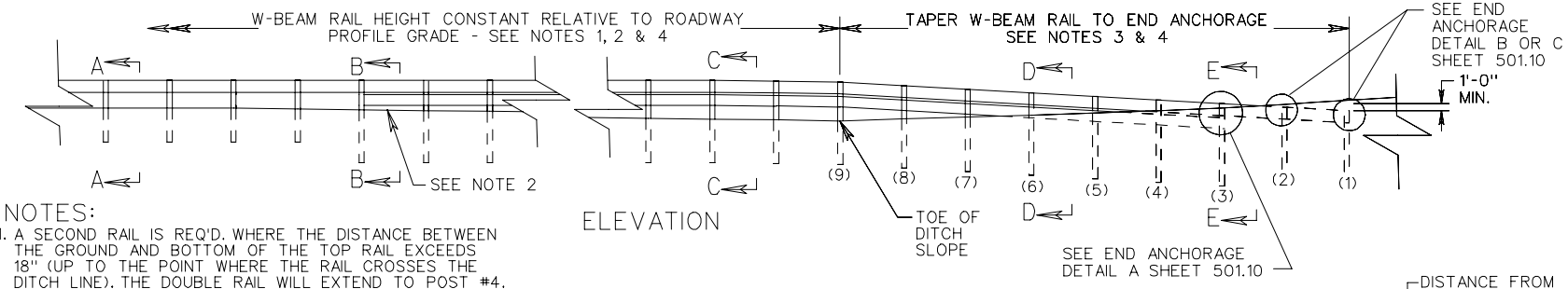

ELEVATION

NOTES:

1. A SECOND RAIL IS REQ'D. WHERE THE DISTANCE BETWEEN THE GROUND AND BOTTOM OF THE TOP RAIL EXCEEDS 18" (UP TO THE POINT WHERE THE RAIL CROSSES THE DITCH LINE). THE DOUBLE RAIL WILL EXTEND TO POST #4.
2. MAXIMUM DISTANCE BETWEEN BOTTOM OF THE LOWER W-BEAM RAIL AND GROUND LINE IS 18". WHEN DOUBLE RAIL IS REQ'D., TAPER BOTH W-BEAM RAILS TO MAINTAIN THE 18" DISTANCE FROM THE GROUND.
3. TAPER BOTH W-BEAM RAILS FROM HEIGHT AT TOE OF DITCH SLOPES TO 1'-0" BELOW FINISHED GRADE AT POST #1 (8'-0" OFFSET).
4. A 8'-0" LONG POST MUST BE USED WHEN UPPER AND LOWER W-BEAM RAILS ARE REQUIRED. FROM THE BEGINNING OF THE LOWER RAIL THROUGH POST #3.
5. STANDARD GR-6 TERMINAL TREATMENT MAY BE USED AT THE RUN-ON END OF DIVIDED HIGHWAYS (LEFT AND RIGHT OF TRAFFIC) AND AT THE RUN-ON AND RUN-OFF ENDS ON UNDIVIDED HIGHWAYS.
6. ALL POST SPACING 6'-3" C-C UNLESS OTHERWISE NOTED. THE POST MAY BE W6 X 8.5 STEEL OR 6 X 8 WOOD EXCEPT THE LAST 3 TERMINAL POSTS MUST BE W6 X 8.5 STEEL.
7. FOR SECTIONS D-D & E-E, AND END ANCHORAGE DETAILS SEE SHEET 501.10.
8. ALL TERMINAL RUN-ON OR RUN-OFF MUST BE INSTALLED WITH LAPPING THE RAILS IN THE DIRECTION THAT THE TERMINALS WERE INSTALLED WHEN TESTED TO NCHRP 350 REQUIREMENTS.
9. IF THE BACKSLOPE IS 1:1 OR STEEPER THE W-BEAM MAY BE ANCHORED PER SOLID ROCK CUT INSTALLATION (DETAIL F).

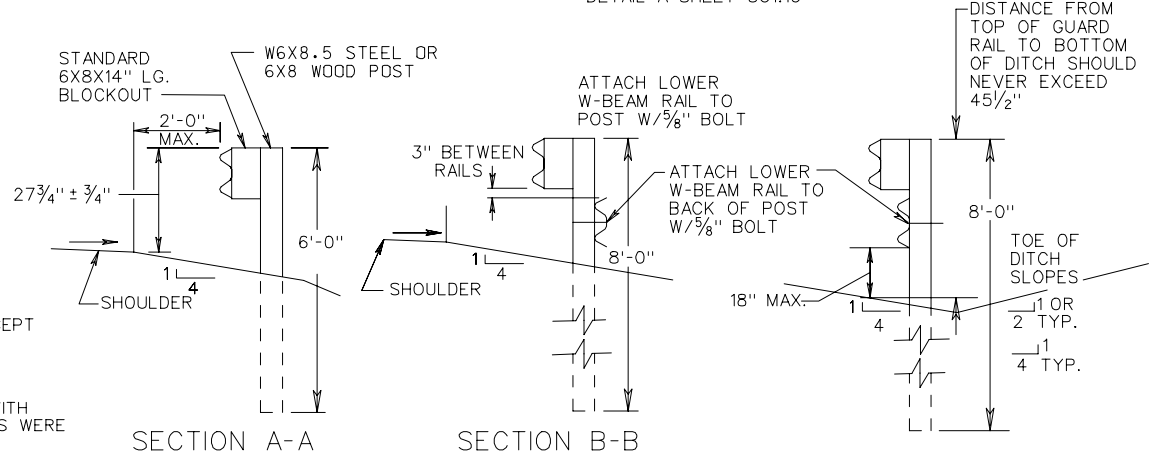

SECTION A-A

SECTION B-B

SECTION C-C

SHEET 1 OF 2

TERMINAL TREATMENT FOR W BEAM GUARDRAIL

VIRGINIA DEPARTMENT OF TRANSPORTATION

SPECIFICATION REFERENCE

505
221

REV. 2/06

501.09