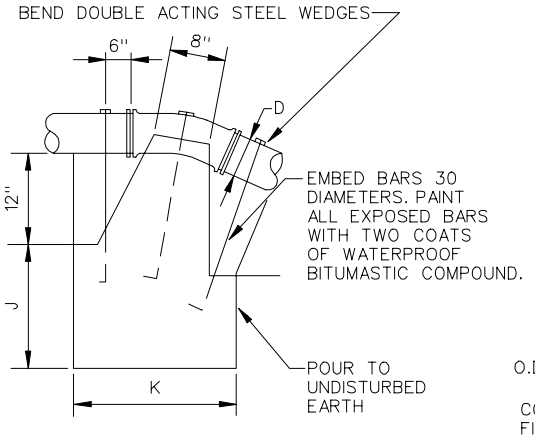

ELEVATION

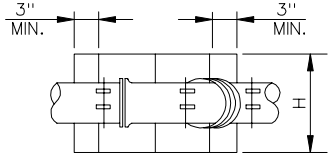

PLAN

LOWER VERTICAL BENDS
4" TO 12" MAINS

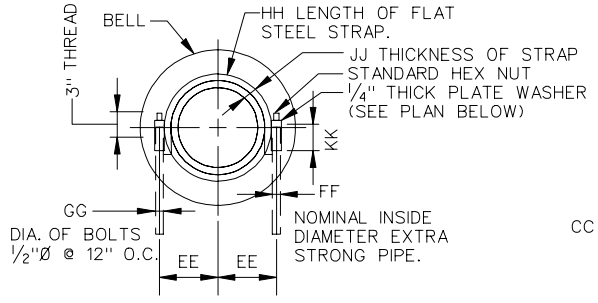

CROSS SECTION

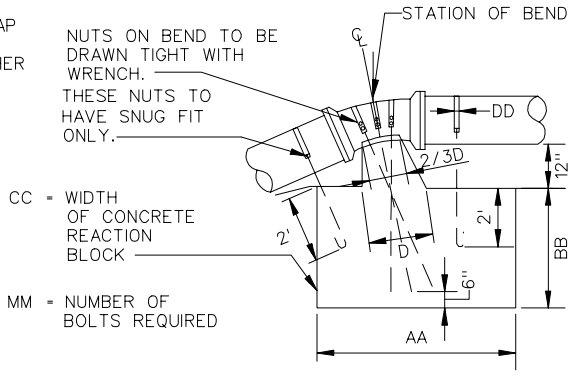

ELEVATION

NOTES:

1. FOR 11 1/4° BENDS USE ONE STRAP ON BEND WITH ANCHOR BOLTS ON CENTER LINE OF BEND.
2. PAINT ALL EXPOSED STEEL WITH TWO COATS OF A WATERPROOF BITUMASTIC COMPOUND.

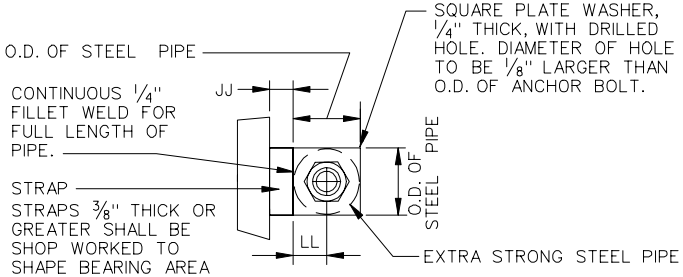

PLAN

STRAP CONNECTION

LOWER VERTICAL BENDS
16" AND LARGER MAINS

DIA.	LOWER VERTICAL BENDS																																																	
	LOWER VERTICAL BENDS REINFORCING BARS			11 1/4°												22 1/2°												45°																						
	11 1/4	22 1/2	45	AA	BB	CC	DD	EE	FF	GG	HH	JJ	KK	LL	MM	AA	BB	CC	DD	EE	FF	GG	HH	JJ	KK	LL	MM	AA	BB	CC	DD	EE	FF	GG	HH	JJ	KK	LL	MM												
4"	3-#4	3-#4	3-#4																																															
6"	3-#4	3-#4	3-#4																																															
8"	3-#4	3-#4	3-#4																																															
10"	3-#4	3-#4	3-#5																																															
12"	3-#4	3-#4	3-#5																																															
16"				4.00	2.00	3.50	.17	.81	.08	.06	2.83	.02	.19	.06	6	5.75	2.5	4.50	.17	.81	.08	.06	2.83	.02	.19	.06	10	6.67	4.00	5.50	.17	.81	.08	.06	2.83	.02	.19	.06	10												
20"				5.00	2.50	4.00	.17	.99	.08	.06	3.53	.03	.19	.06	6	7.50	3.00	4.75	.17	.99	.08	.06	3.58	.03	.19	.06	10	8.25	4.75	6.00	.17	.99	.08	.06	3.58	.03	.19	.06	10												
24"				5.75	2.50	4.25	.17	1.17	.10	.07	4.42	.03	.42	.08	6	8.50	3.67	5.00	.21	1.18	.12	.08	4.52	.03	.42	.08	10	9.50	5.50	6.50	.21	1.18	.12	.08	4.42	.03	.42	.11	10												
30"				6.50	2.67	5.50	.21	1.44	.12	.08	5.67	.04	.50	.08	6	9.00	4.50	5.75	.21	1.44	.12	.09	5.67	.04	.50	.08	10	11.25	6.25	7.00	.21	1.44	.12	.09	5.67	.04	.50	.08	10												
36"				7.00	4.00	5.00	.21	1.71	.17	.10	7.50	.04	.54	.07	6	10.00	5.50	6.17	.21	1.71	.17	.11	7.50	.04	.54	.07	10	12.00	7.00	8.50	.21	1.71	.17	.09	7.50	.04	.54	.07	10												

DIA.	LOWER VERTICAL BENDS					
	11 1/4°			22 1/2°		
	H	J	K	H	J	K	H	J	K
4"	1.50	1.25	2.00	2.00	1.83	2.50	2.50	2.50	3.00
6"	1.50	1.25	2.00	2.00	1.83	2.50	2.50	3.00	3.00
8"	1.50	1.75	3.33	3.33	2.25	3.25	3.25	3.25	4.50
10"	1.50	1.25	3.67	3.67	2.50	4.00	4.00	3.67	4.75
12"	3.00	2.00	4.00	4.00	2.50	4.50	4.50	3.67	5.00

SHEET 2 OF 3

REACTION BLOCKING
WATER AND SANITARY SEWER FACILITIES

VIRGINIA DEPARTMENT OF TRANSPORTATION