DETAIL

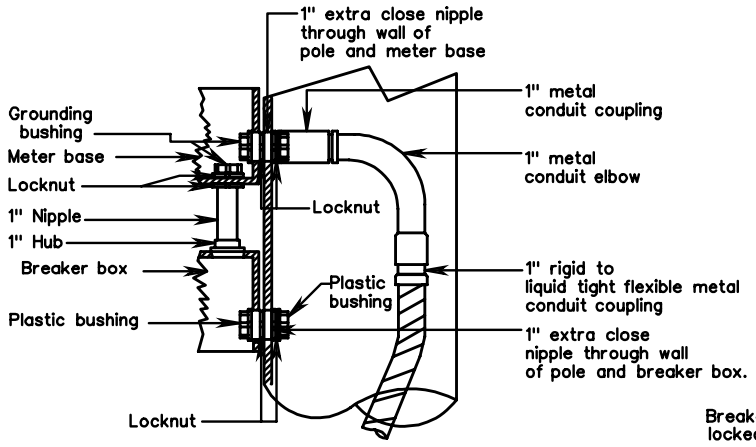

Concrete pad required when mounted on pole in earth areas. (See standard CTE-1 for pad detail)

ALTERNATE DETAIL

(Used when meter base not required)

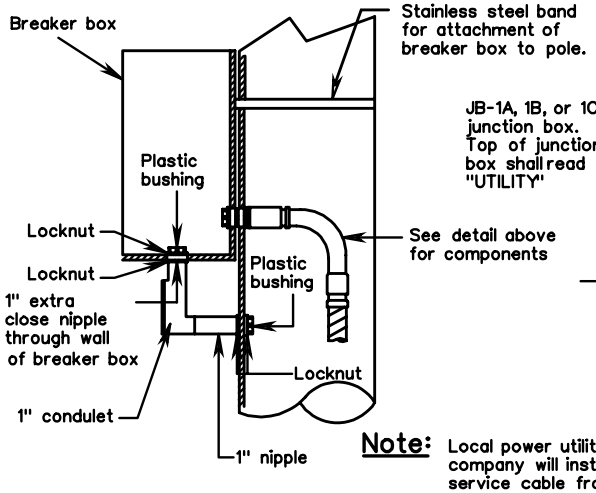

Note: Local power utility company will install service cable from their power source to the junction box and make required splices to the service cable coiled in the junction box.

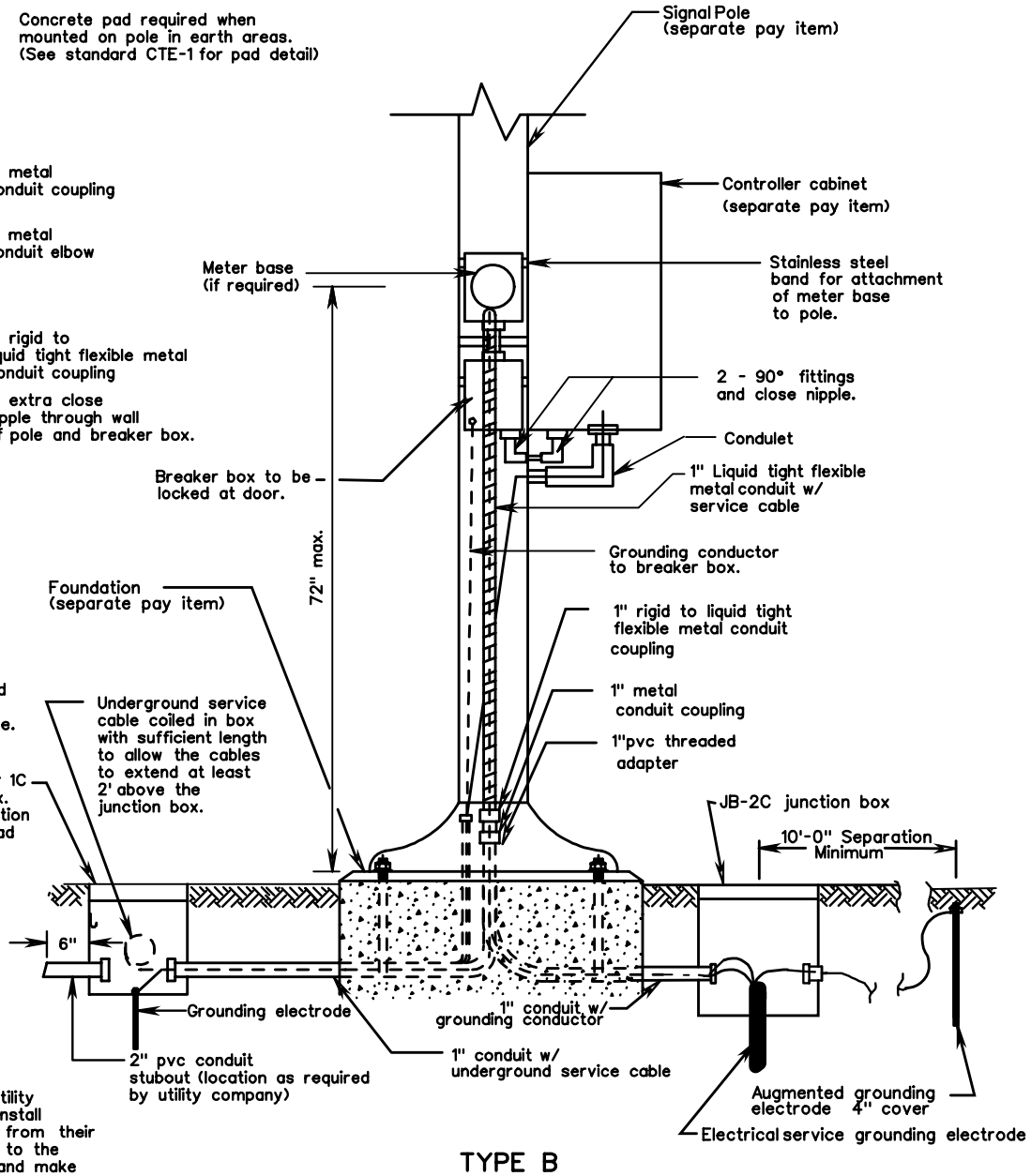

TYPE B

ELECTRICAL SERVICE DETAILS
SIGNAL INSTALLATION

VIRGINIA DEPARTMENT OF TRANSPORTATION

REV. 2/06

1301.31