PR-9

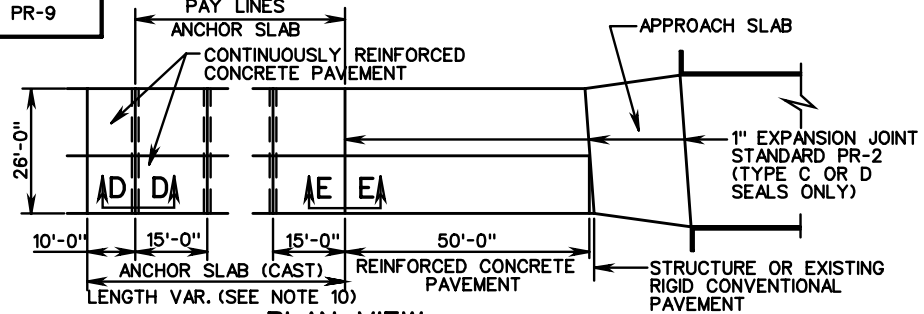

PLAN VIEW
ANCHOR SLAB TYPE T

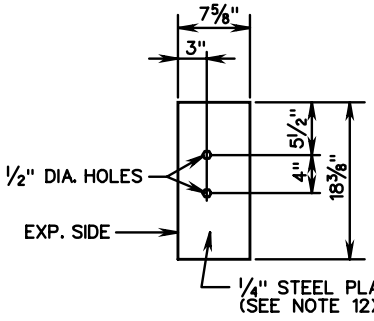

ANCHOR SLAB TYPE II
END PLATE DETAIL

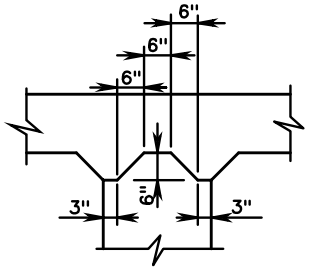

DETAIL A
RAISED KEY
CONSTRUCTION JOINT

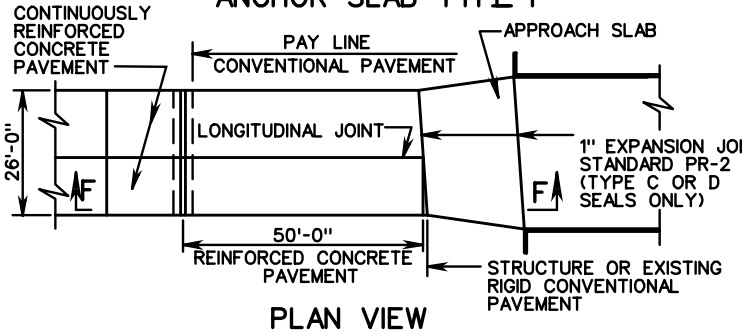

PLAN VIEW
ANCHOR SLAB TYPE II

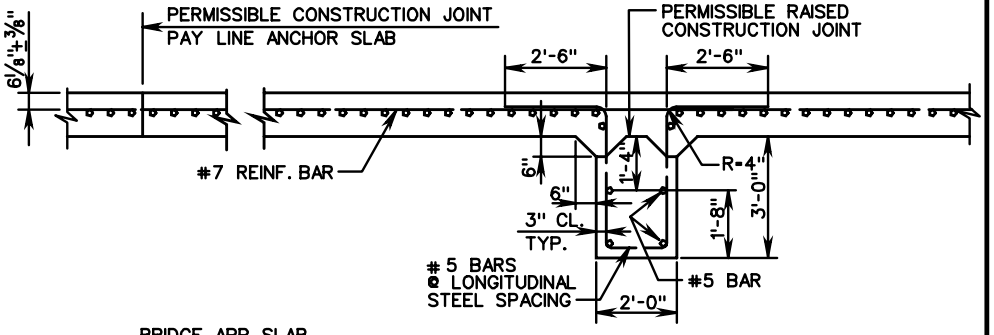

SECTION D-D

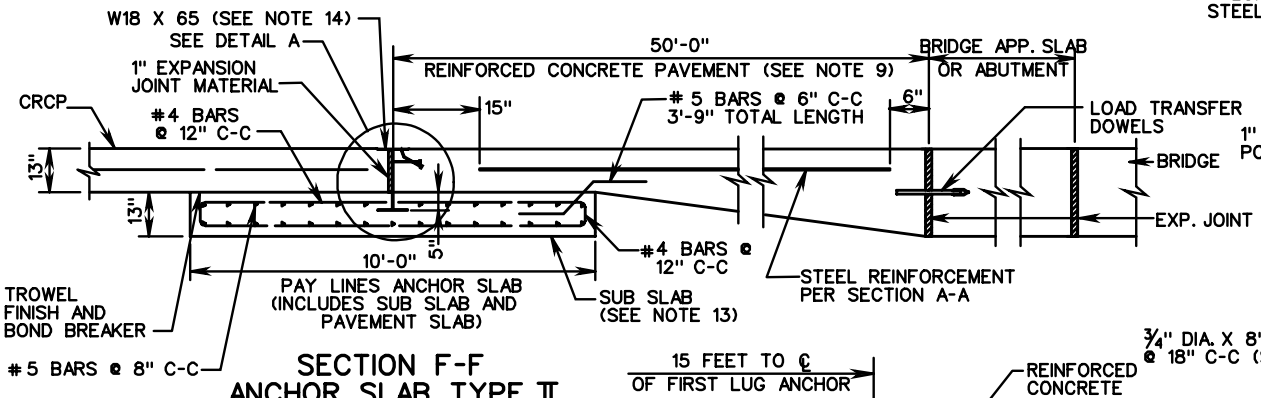

SECTION F-F
ANCHOR SLAB TYPE II
(SEE NOTE 11)

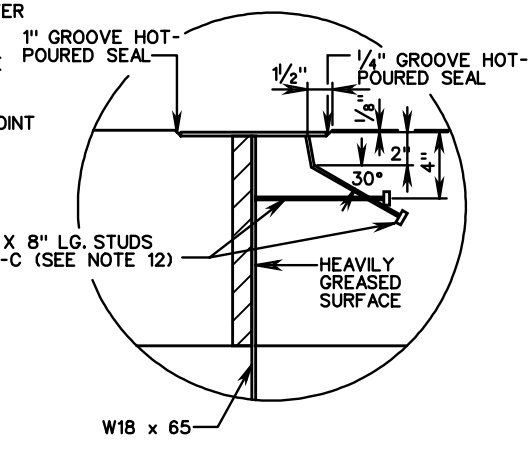

DETAIL A

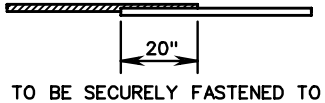

BARS TO BE SECURELY FASTENED TO PREVENT SEPARATION DURING CONCRETE PLACEMENT.

TYPICAL
LONGITUDINAL LAP

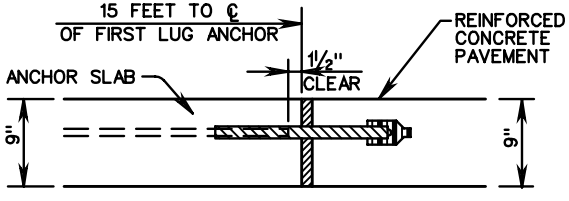

FOR DOWEL & JOINT DETAILS SEE DETAIL OF TRANSVERSE EXPANSION JOINT PR-2

SECTION E-E
ANCHOR SLAB TYPE I

SEE SHEET 3 OF 3 FOR NOTES

VDOT
ROAD AND BRIDGE STANDARDS

SHEET 2 OF 3

REVISION DATE

301.26

13" THICK CONTINUOUSLY REINFORCED CONC. PAVE.

(14' TRAVEL LANE)

VIRGINIA DEPARTMENT OF TRANSPORTATION

SPECIFICATION REFERENCE

316